SUNON®

# DC Brushless Fan & Blower

*All products are RoHS compliant.

www.sunon.com

# Table of Contents


| | Page |
|---|---|
| SUNON research center | 02 |
| DR maglev | 03 |
| SUNON total thermal solution | 04 |
| SUNON production Network | 05 |
| Super silence Fan | 06 |
| SUNON sound quality | 07 |
| Fan tray | 08 |
| DC fan new model numbering system | 09 |
| DC fan old model numbering system | 10 |

DC Fan

| Size (mm) | Air Flow (CFM) | Page | Size (mm) | Air Flow (CFM) | Page |
|---|---|---|---|---|---|
| 17x17x8 | 0.7 ~ 0.9 | 11 | 60x60x10 | 12.2 ~ 16.3 | 35 |
| 20x20x8 | 1.3 ~ 1.6 | 12 | 60x60x15 | 12.7 ~ 30.4 | 36 - 39 |
| 20x20x10 | 1.5 ~ 1.9 | 13 | 60x60x20 | 14.1 ~ 30.5 | 40 - 43 |
| 25x25x6 | 2.2 ~ 3.0 | 14 | 60x60x25 | 13.8 ~ 40.0 | 44 - 47 |
| 25x25x10 | 1.2 ~ 3.8 | 15 | 60x60x38 | 41.5 ~ 56.5 | 48 |
| 25x25x15 | 1.3 ~ 3.1 | 16 | 70x70x15 | 19.0 ~ 27.0 | 49 |
| 30x30x6 | 3.7 ~ 4.9 | 17 | 70x70x20 | 23.5 ~ 43.0 | 20 - 51 |
| 30x30x10 | 2.5 ~ 5.5 | 18 - 19 | 70x70x25 | 40.0 ~ 49.0 | 52 |
| 30x30x15 | 2.7 ~ 6.0 | 20 | 80x80x15 | 30.0 ~ 37.0 | 53 |
| 35x35x6 | 4.3 ~ 5.5 | 21 | 80x80x20 | 29.0 ~ 36.0 | 54 |
| 35x35x10 | 3.6 ~ 7.2 | 22 | 80x80x25 | 23.9 ~ 60.0 | 55 - 62 |
| 40x40x6 | 5.5 ~ 6.3 | 23 | 80x80x32 | 50.3 ~ 59.4 | 63 - 64 |
| 40x40x10 | 5.4 ~ 10.0 | 24 - 27 | 80x80x38 | 59.5 ~ 84.1 | 65 |
| 40x40x20 | 5.5 ~ 10.8 | 28 - 30 | 92x92x25 | 28.4 ~ 75.0 | 73 |
| 45x45x10 | 9.2 ~ 11.8 | 31 | 92x92x38 | 91.7 ~ 120.2 | 74 |
| 50x50x10 | 8.4 ~ 13.8 | 32 | 120x120x25 | 75.0 ~ 150.0 | 75 - 77 |
| 50x50x15 | 7.7 ~ 18.6 | 33 - 34 | 120x120x38 | 93.0 ~ 190.0 | 78 - 79 |

| | Page |
|---|---|
| DC Blower series new model numbering system | 80 |
| DC Blower series old model numbering system | 81 |

DC Blower

| Size (mm) | Air Flow (CFM) | Page | Size (mm) | Air Flow (CFM) | Page |
|---|---|---|---|---|---|
| 50x50x15 | 2.6 ~ 5.4 | 82 - 83 | 75x75x30 | 7.5 ~ 13.6 | 86 |
| 50x50x20 | 4.8 ~ 5.7 | 84 | 97x94x33 | 22.4 ~ 30.5 | 87 |
| 60x60x15 | 3.9 ~ 5.7 | 85 | | | |

# SUNON RESEARCH CENTER

## about SUNON

SUNON was founded in 1980 and has always upheld the philosophy of "Brand, Innovation, and Value" for their business operations. From the start, the SUNON name has become an international trademark that is well recognized and featured on products sold worldwide. Over the years, SUNON has continuously focused on developing and making innovations for their core motor technology, leading the industry in product trends for motors, cooling fans, and cooling modules. SUNON is one of the few operations in the world with a motor R&D team and is fully capable of developing innovative new motor designs. Examples for the R&D efforts are the world's first MagLev design and SUNON Mighty Mini series, featuring a compact sub-centimeter size that is the world's smallest and thinnest fan. Today, SUNON is the worldwide leader in precision motors and micro miniature fans, and is widely recognized by the industry as the designated partner for various multinational corporations. SUNON products are widely used in various applications and industries such as information technology, network communications, optoelectronics, and automobile electronics industries, as well as in industrial production equipment, medical equipment, home applications, OA machines, and others.

## SUNON Research Center the Driving Engine for Inventions and Innovations

SUNON established the "SUNON Research Center" in Kaohsiung in 2002 to promote and execute the innovation blueprint for SUNON Group. Research labs and engineers from Europe, America, Japan, and China are centralized to form a worldwide technological service network for quick and efficient services.

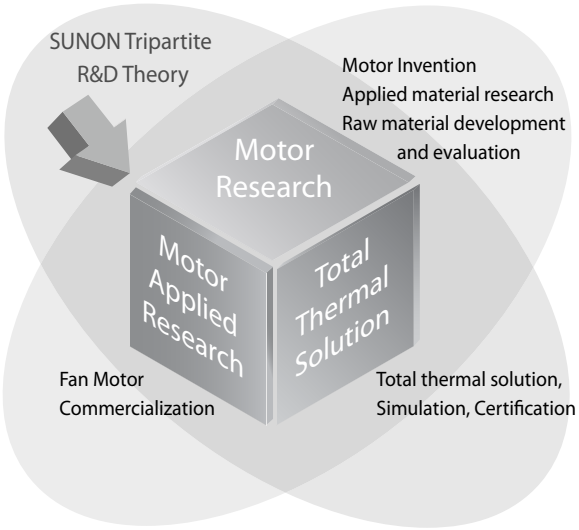


### Key Modules for Innovating Core Motor Technology

SUNON has been researching their motor technology for over 30 years and adhering to the SUNON R&D Trinity as their innovation roadmap, focusing on the three major technology fields of "Motor Research," "Motor Applied Research," and "Total Thermal Solution." SUNON strives to expand the endless possibilities and optimization of motor applications and will continue to make breakthroughs and product innovations. The efforts will push SUNON to the front of the technology curve and clients will be able to realize their future dream products with the three key SUNON products of motors, cooling fans, and cooling modules.

SUNON has the capacity to design and implement the complete magnetic, mechanical, and driving circuit of a motor to conform to client design specifications. With the efforts of the mechanism and electrical circuit engineering teams, SUNON recognizes the needs of their clients regarding cooling modules and can provide flexible designs for high performance and high quality cooling fans. SUNON utilizes advanced simulation systems and analysis projects that result in an even more accurate heat analysis and heat dissipation design for the system. Subsequently the most efficient total thermal solution can be provided to the client.

# DR MagLev

【DR MagLev = Dust-Resistance MagLev】

## Key Feature

SUNON DR Maglev (Dust-Resistance MagLev) Motor Fan uses the MagLev technology with new design features of S&C design and B & S Technology.
After 8 years of development and testing, SUNON's DR MagLev Motor Fan is being introduced with the advantages of prevents the stator and impeller from moving, better dust-resistance, higher reliability, and longer life expectancy.

## Design Concepts and Characteristics of DR MagLev

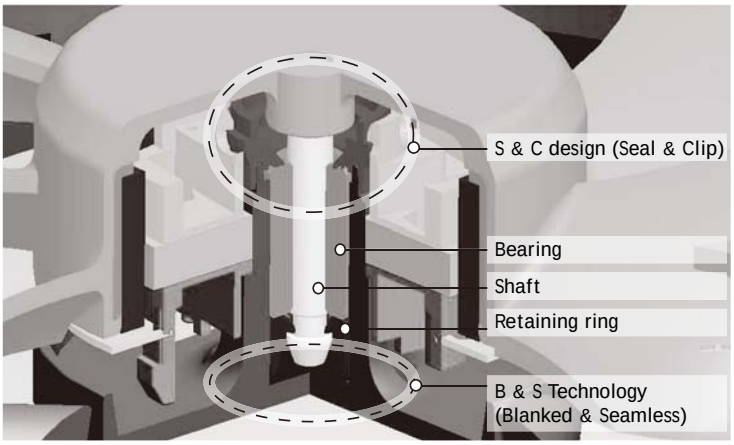


The two innovative design concepts of DR MagLev development are B&S (Blanked & Seamless) Technology and S&C (Seal & Clip) Design.
These innovative designs bring dual excellent efficiencies to extend fan life:
1.To avoid dust invasion and extend motor life.
2.To prevent the motor components from falling off.

( Note: The design concepts of DR MagLev Motor are suitable for every kind of motor and product size. The structures are different from the above picture, which was made when the DR MagLev design was applied to different motors. )

### 1 Characteristic

The innovative S&C Design provides the best resistance to dust invasion.

### 2 Characteristic

DR MagLev's one-piece structure with the B&S Technology and S&C Design provides the better sealed bearing system.

### 3 Characteristic

The S&C Design strengthens the locked position of both motor and stator to avoid stator and impellor from moving due to temperature changes. This allows the product to be more stable and run longer.

## SUNON Innovative S&C Design

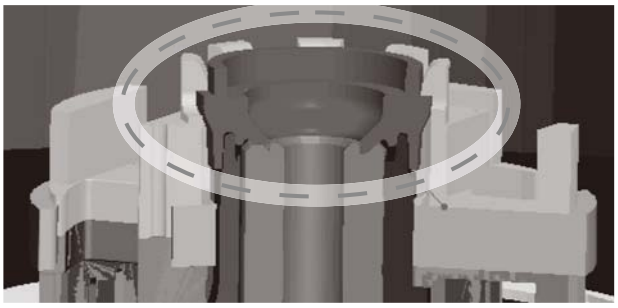

This design concept can solve the moving problem of the motor's components, provide better dust-resistance.

It can avoid the impeller from moving and better sealed bearing system.

# SUNON TOTAL THERMAL SOLUTION

SUNON introduced its first chip cooling module in 1993, it has continued to rely on its impressive R&D team to also succeed in the laptop computer cooling module market. SUNON's innovative technology and superior design talent have consistently won customers' trust. In addition to SUNON's cutting-edge cooling fan products, it also offers laptop, VGA card, Desk Top, and server product designs. SUNON's cooling module product line ranges from low-end to high-end, enabling it the ability to provide customers with "Total Thermal Solutions."

## Sophisticated Tools Strengthen Design and Quality

Apart from optimized design and superior R&D, we use infrared (IR) thermal imagers in module design work to make precise measurements of module temperatures, thereby avoiding the use of conventional thermocouples to measure temperatures. Our R&D personnel can instead rely on IR images to get a clear understanding of system temperature distribution. The data from our thermal imaging reports allow us to provide a clear system-wide thermal and cooling design analysis. In order to give customers the best quality guarantee, we go well beyond industry standards in production, assembly, inspection equipment design and deployment. We have also committed large amounts of manpower and material resources, and adopted the newest hardware and software equipment in our quest for quality. For instance, our thermal inspection systems can fully simulate thermal resistance measurements and pressure settings within systems and measure thermal resistance simultaneously at six different points. Precise measurements of pressure settings enable simulation of pressure within the system, making measurements even more accurate and protecting product quality by ensuring that excessive pressure doesn't cause product deformation. Furthermore, independent bar codes on each product ensure effective product tracking and improve the quality of after-sales service. We can satisfy our customers' needs for various types of customized cooling modules while meeting the highest quality requirements.

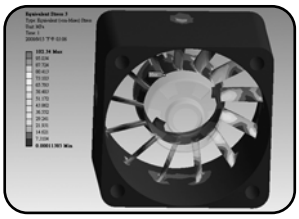
Structural Simulation analysis

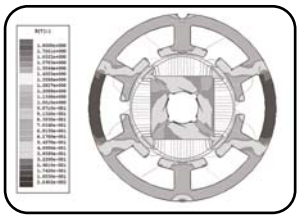
Magnetization Simulation analysis

Fluid dynamic analysis

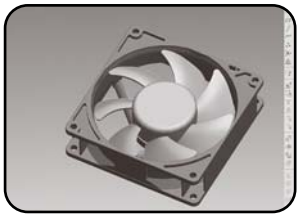
3D model

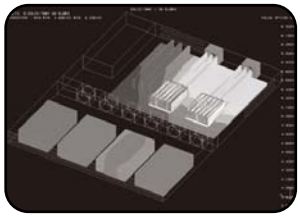
Thermal analysis

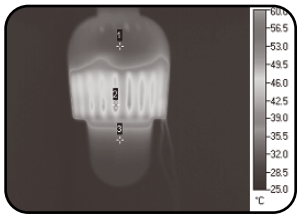

IR thermograph inspect

Advantage for Sunon Thermal Solutions Design

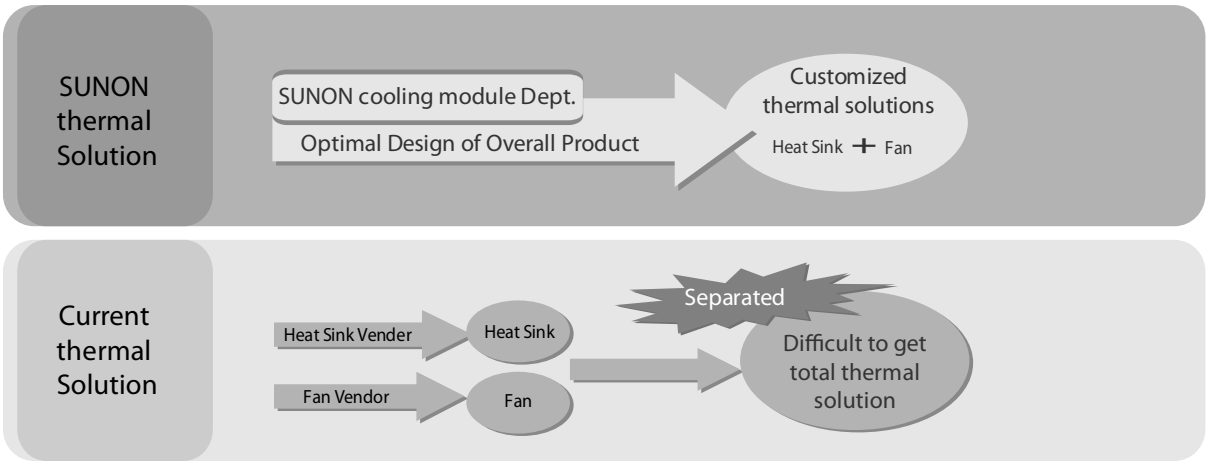

# SUNON PRODUCTION NETWORK

## SUNON Reliability Verification System

SUNON has 5 reliability testing labs worldwide equipped with the topmost precision verification instruments for testing from the design phase, through pre-production, and into mass production. The complete verification system is computerized and fully automated for precise analysis of product reliability and quality satisfaction to meet the market requirements.

## SUNON Production Network

SUNON Group has a total of four manufacturing plants located in both China and Taiwan for production of 8mm~250mm series of fan products, 0.1Watt~60Watt of motor products, and various cooling module products. The overall monthly production output capacity is 20 million units.

In addition to the MES system that provides clients with the best manufacturing quality, SUNON goes well beyond industry standards in production, assembly, inspection equipment design and deployment. SUNON has also committed large amounts of manpower and material resources, and adopted the newest hardware and software equipment, in our quest for quality. For example, an automated production line for cooling products, the self-developed automated inspection machine for the production line, a heat inspection system capable of six simultaneous measurements, and an independent barcode with each cooling product indicate SUNON's commitment.

Our products have passed UL, TUV, VDE, CCC, CSA certifications base on requirements from different regions.

**All SUNON products are RoHS compliant from design phase to mass production.**
**SUNON is the long-term green partner for SONY, CANON, SAMSUNG and various other multinational companies**

SUNON deeply recognizes its corporate duty to protect our earth and the ecosystem and to reduce the use of materials that impact the environment. In light of this, SUNON has been actively promoting green product design, green purchasing, and green manufacturing reforms. All current product series conform to EU RoHS and China RoHS, and SUNON has been selected as the green environment partner for multinational corporations such as SONY, CANON, and SAMSUNG. All of the aforementioned efforts will result in greener products that have the least impact on the worldwide environment.

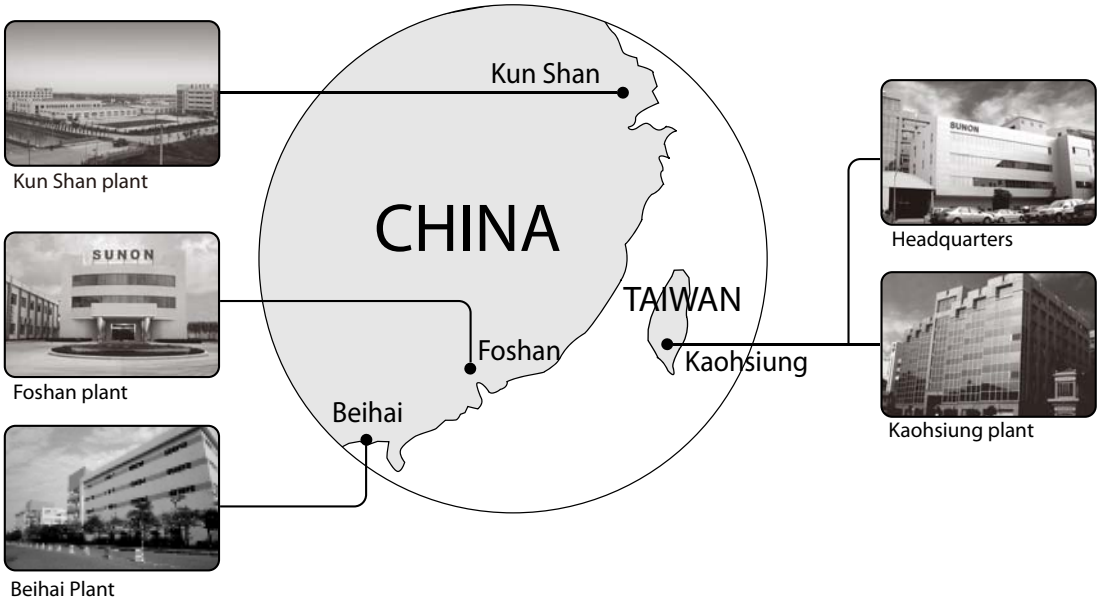

# SUPER SILENCE FAN

Silence

Superior Sound Quality System

Low Starting Voltage

Incorporating highly ergonomic technology with the lifestyles of the future, SUNON has developed the "Super Silence" fan series, which is characterized by our insistence on maintaining the best environmental quality and paying attention to minute detail. This series is designed and engineered to ensure the best sound quality. Using multidimensional noise analysis, the sound quality has been improved from traditional acoustic norms to psychoacoustic levels. Micro-motor technology has allowed us to create the maximum possible space between fan blades and air channels. With its low rotating speed, the fan performs silently while still maximizing cooling efficiency. "Super Silence" fan series have low voltage characteristic and are designed for a wide range of uses.

These fans have medical, household, commercial, and many other applications. They also will create a soothing and ergonomic user environment and carry on the "Cool" and "Quiet" traditions typical of SUNON products.

SUNON's "Super Silence" fan series was tested with standard digital home equipment located one meter away from the user. Based upon "ISO 532B hearing sensation" and charts on human auditory reactions that were plotted for different decibel and frequency levels, the threshold noise level for SUNON's Super Silence series' is below 20 phon, the minimum level that is discernible in daily living.

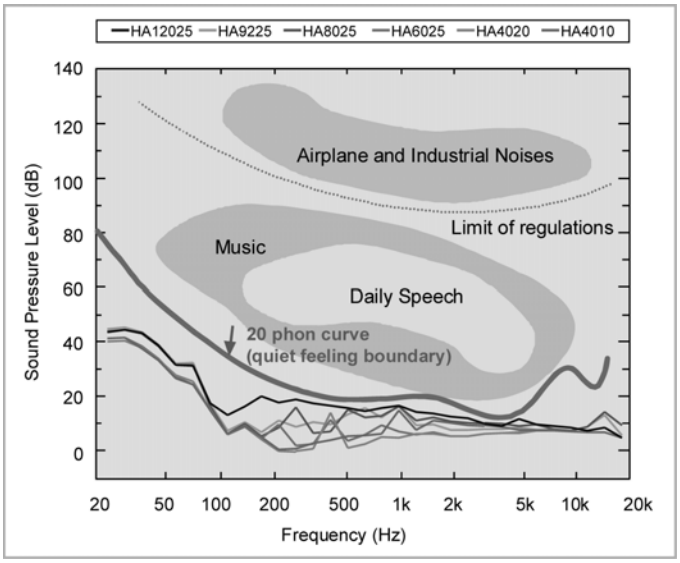

# SOUND QUALITY ANALYSIS AND RESEARCH

SUNON introduced acoustics engineering in the year 2000 to transform the traditional school of Sound Pressure and Sound Power into the more advanced theory of Sound Quality. SUNON's Sound Quality analysis and research is performed by Head Measurement System (HMS) . The HMS system records and simulates the auditory senses of the human ears, where the sounds, vibration, rotation speed, and electrical signals are measured. The software subsequently performs time domain and sound quality parameter analysis to assist the acoustics engineers in allowing SUNON products to feature a more favorable sound quality. The expertise and experience of the acoustics engineer combined with the software analysis will result in an even more user-friendly environment that is rivaled by none.

## Sound Quality Testing

Sound quality is measured in an semi anechoic chamber by means of Head Measurement System (HMS) .
The Sound quality of fans can be described according to the objective parameter of sound (Loudness, Tonality, Roughness/Fluctuation, Sharpness).
After the recording of acoustic signals,the data is performed the FFT, order Psycho acoustic And modulation analyses and playback diagnosis in order to improve the sound quality of fans.

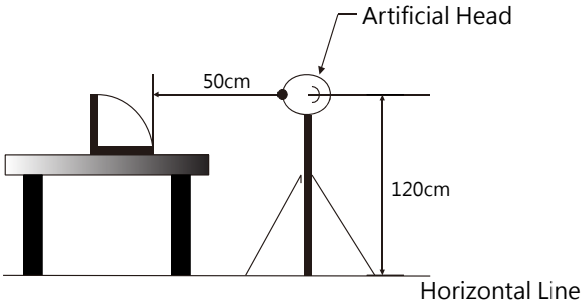


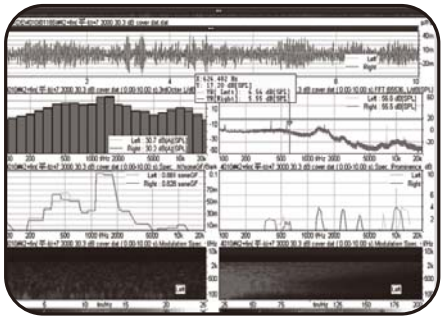

## The mobile Sound Quality Laboratory SQlab II

SQlab II is a compact, mobile multi-channel measurement system for acoustic analysis, vibration investigation and sound design. It is used wherever investigation of sound quality should be combined with vibrational measurements.

The comparison of vibrational measurements with acoustic signals enables the user to draw direct conclusions from sound sources and their sound quality. For this purpose, SQlab II is able to measure aurally-accurate recordings of sound events using an Artificial Head and vibration data with accelerometers, etc. at the same time. Thus, correlations between the subjective aural impressions of sound events (airborne sound) and the related sources (vibration, solid-borne sound) as well as transfer mechanisms become apparent. This is the basis for sound optimization. Moreover, SQlab II can be used as a "stethoscope" for error analysis.

## The Analysis Software

It can analyze, filter, display and document acoustic and vibration measurement data in a wide range of modes. Yet an outstanding feature of this software is the possibility of including the aural sense of the human user in signal analysis.

## HEADphone Playback System

The digital 24 bit HEADphone Playback System HPS IV is complementary to the Head Measuring System HMS III. Conditioning of audio data for aurally-accurate playback is via equalization of the acoustic signal in the programmable Equalizer PEQ IV, with subsequent amplification via the Power Amplifier PVA IV.2. Two electrostatic headphones can be connected to the playback system, which are individually calibrated and correspondingly driven.

# FAN TRAY

8 pcs axial fan

12 pcs axial fan

9 pcs axial fan

## Fan Tray Features

- Communication：$I^2C$ interface
- EMC
- Advantage：
  - · Soft Start.
  - · Hot Swappable Function.
  - · Reverse Polarity Protection.
  - · Over Voltage Protection.
  - · Inrush Current Protection.
  - · Over Current Protection.
  - · Linear or Step Speed Change.
  - · Control Fan Speed with Ambient Temperature.
  - · PWM or Voltage Speed Control.
  - · Redundancy Function.
  - · LED Display Fan Tray Health Status.
  - · EEPROM for e-ID.
  - · Thermal Sensor Fail and Fan Fail Alarm Signal Output.

## Sunon Fan Tray Capability

- ODM & OEM Design
- Industry/ Telecom (Indoor & outdoor) & Networking and other application
- CAE Capability to Optimal System Cooling Design
- Widely Applicative Fan：12V / 24V / 48V / 72V
- 100% Burn In Testing & Monitor Equipment
- Flexible Manufacture
- Communication：$I^2C$ interface
- Traceability
- 100% Auto Function Testing
- Safety Compliance：UL/CUL/TUV/VDE/CE

## DC Fan New Model Numbering System

M E 80 25 1 V 1 – 1 0000 – A99

**Function Code**
999: standard model
A99: AutoRestart
C99: F type (3rd wire)
D99: with PWM
F99: AutoRestart and R type(3rd wire)
G99: AutoRestart and F type(3rd wire)
H99: AutoRestart and with PWM
Q99: AutoRestart , R type and with PWM
S99: AutoRestart , F type and with PWM

**Customer Code**

**Generation Code**
Blank : None
1 : Gen1

**Speed**
X: Super High 1: High 2: Medium 3: Low
4: Super Low

**Bearing**
V: Vapo B: 2 Ball S: Sleeve

**Voltage**
0: 5VDC 1: 12VDC 2: 24VDC 3: 36VDC
4: 48VDC

**Fan Thickness**
0~9
A~Z

**Frame Size**
0~9
A~Z

| Code | Size(mm) | Code | Size(mm) | Code | Size(mm) | Code | Size(mm) |
|---|---|---|---|---|---|---|---|
| 01~09 | 01~09 | A0~A9 | 100~109 | K0~K9 | 200~209 | V0~V9 | 300~309 |
| 10~19 | 10~19 | B0~B9 | 110~119 | L0~L9 | 210~219 | W0~W9 | 310~319 |
| 20~29 | 20~29 | C0~C9 | 120~129 | M0~M9 | 220~229 | X0~X9 | 320~329 |
| 30~39 | 30~39 | D0~D9 | 130~139 | N0~N9 | 230~239 | Y0~Y9 | 330~339 |
| 40~49 | 40~49 | E0~E9 | 140~149 | P0~P9 | 240~249 | Z0~Z9 | 340~349 |
| 50~59 | 50~59 | F0~F9 | 150~159 | Q0~Q9 | 250~259 | | |
| 60~69 | 60~69 | G0~G9 | 160~169 | R0~R9 | 260~269 | | |
| 70~79 | 70~79 | H0~H9 | 170~179 | S0~S9 | 270~279 | | |
| 80~89 | 80~89 | I0~I9 | 180~189 | T0~T9 | 280~289 | | |
| 90~99 | 90~99 | J0~J0 | 190~199 | U0~U9 | 290~299 | | |

**Motor Type**

**Series Code**
M Series E Series P Series

## Certification

## Safety

* Note: For critical or extreme environments, including non stop operation, please contact SUNON and we will gladly provide assistance with your product selection to ensure an appropriate cooling product for your application.
* Note: The "Life Expectancy" of the fan has not been evaluated for use in combination with any end application. Therefore, the Life Expectancy Test Reports(L10 and MTTF Report) that relate to the fan are only for reference.

## DC Fan Old Model Numbering System

PMD 12 07 P T V 1 – A

**Auto Restart**

**Speed**
X: Super
1: High
2: Middle
3: Low
4: Extra Low

**Bearing System**
V: Vapo
B: Ball

**Frame Thickness**

| | | |
|---|---|---|
| E : 6mm | B : 24mm | I : 35mm |
| D: 8mm | T : 25mm | M: 38mm |
| F : 10mm | Q: 28mm | O : 40mm |
| G: 12mm | N: 30mm | Z : 51mm |
| H: 15mm | L : 32mm | P : 56mm |
| K : 20mm | Y : 33mm | W: 60mm |

**Frame Material**
P: PBT Plastic
A: Aluminum

**Frame Size**

| | | | |
|---|---|---|---|
| 17:17mm | 38:38mm | 06:60mm | 97:97mm |
| 01:20mm | 04:40mm | 07:70mm | 12:120mm |
| 02:25mm | 45:45mm | 75:75mm | H0:170mm |
| 03:30mm | 05:50mm | 08:80mm | |
| 35:35mm | 55:55mm | 09:92mm | |

**Voltage**
05:5VDC 12:12VDC
24:24VDC 48:48VDC

**Fan Series**
PMD Series
PSD Series

### P/N

Example: KDE1208PTV1 P/N:13.MS.A.GN

- (2) Two ball bearing
- A Auto restart
- F 3rd wire with frequency generation waveform
- R 3rd wire with rotation detector waveform
- GN RoHS compliance
- Z Specific RPM
- PWM with PWM function

## Certification

## Safety

* Note: For critical or extreme environments, including non stop operation, please contact SUNON and we will gladly provide assistance with your product selection to ensure an appropriate cooling product for your application.
* Note: The "Life Expectancy" of the fan has not been evaluated for use in combination with any end application. Therefore, the Life Expectancy Test Reports(L10 and MTTF Report) that relate to the fan are only for reference.

# 17x17x8 mm

## 0.7~0.9 CFM

### Specifications

| MAGLev by SUNON | Bearing | Rating Voltage | Power Current | Power Consumption | Speed | Air Flow | Static Pressure | Noise | Weight | Curve |
|---|---|---|---|---|---|---|---|---|---|---|
| | ● VAPO | (VDC) | (mA) | (WATTS) | (RPM) | (CFM) | (inch-$H_2O$) | (dB(A)) | (g) | |
| MF17080V1-10000-A99 | ● | 5 | 93 | 0.47 | 21000 | 0.9 | 0.28 | 21.5 | 3.9 | 1 |
| MF17080V2-10000-A99 | ● | 5 | 66 | 0.33 | 16500 | 0.7 | 0.17 | 14.2 | 3.9 | 2 |

### Air Flow-Static Pressure Characteristics

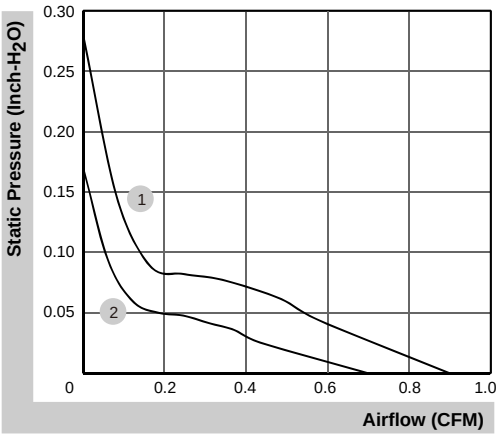


### External dimensions(mm)

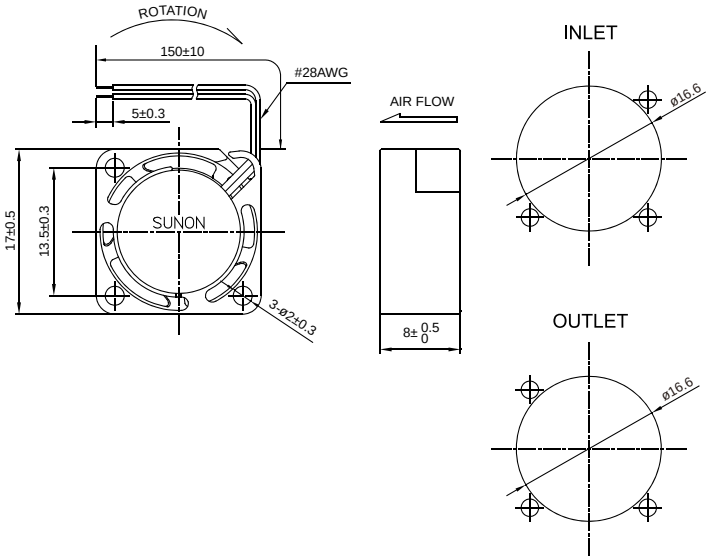


*All model could be customized. Please contact with Sunon Sales.
*Specifications are subject to change without notice. Please Visit SUNON website at www.sunon.com for update information.

# 20x20x8 mm

## 1.3~1.6 CFM

### Specifications

| MAGLev by SUNON | Bearing | Rating Voltage | Power Current | Power Consumption | Speed | Air Flow | Static Pressure | Noise | Weight | Curve |
|---|---|---|---|---|---|---|---|---|---|---|
| | ● VAPO | (VDC) | (mA) | (WATTS) | (RPM) | (CFM) | (inch-$H_2O$) | (dB(A)) | (g) | |
| MF20080V1-10000-A99 | ● | 5 | 90 | 0.45 | 15000 | 1.6 | 0.24 | 23.0 | 4.0 | 1 |
| MF20080V2-10000-A99 | ● | 5 | 68 | 0.34 | 12000 | 1.3 | 0.15 | 21.0 | 4.0 | 2 |

### Air Flow-Static Pressure Characteristics

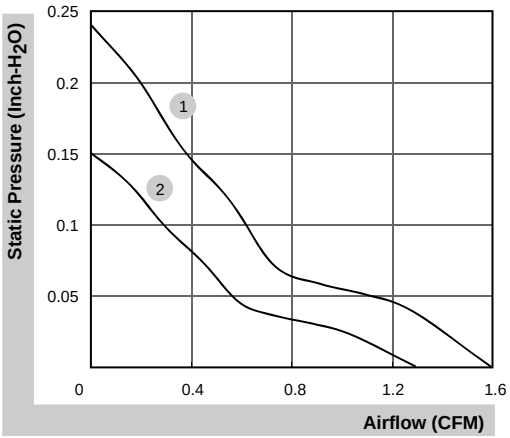


### External dimensions(mm)

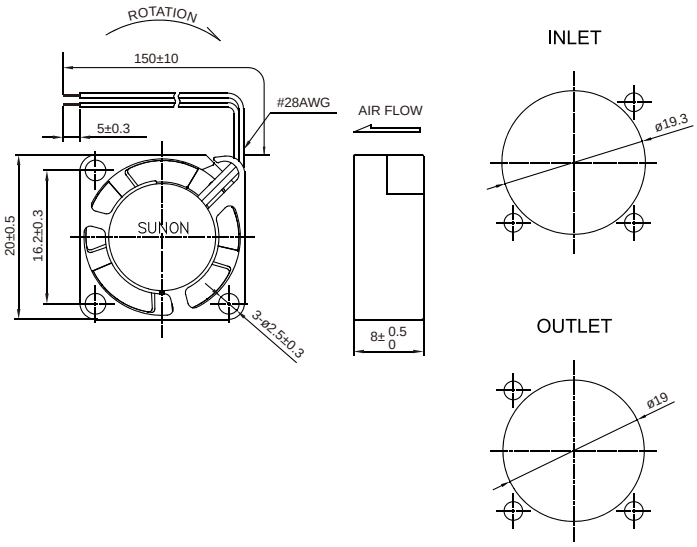


*All model could be customized. Please contact with Sunon Sales.
*Specifications are subject to change without notice. Please Visit SUNON website at www.sunon.com for update information.

# 20x20x10 mm

## 1.5~1.9 CFM

### Specifications

| MAGLev by SUNON | Bearing | Rating Voltage | Power Current | Power Consumption | Speed | Air Flow | Static Pressure | Noise | Weight | Curve |
|---|---|---|---|---|---|---|---|---|---|---|
| | ● VAPO | (VDC) | (mA) | (WATTS) | (RPM) | (CFM) | (inch-$H_2O$) | (dB(A)) | (g) | |
| MF20100V1-10000-A99 | ● | 5 | 106 | 0.53 | 16500 | 1.9 | 0.29 | 25.0 | 4.65 | 1 |
| MF20100V2-10000-A99 | ● | 5 | 80 | 0.40 | 14000 | 1.5 | 0.20 | 20.0 | 4.65 | 2 |

### Air Flow-Static Pressure Characteristics

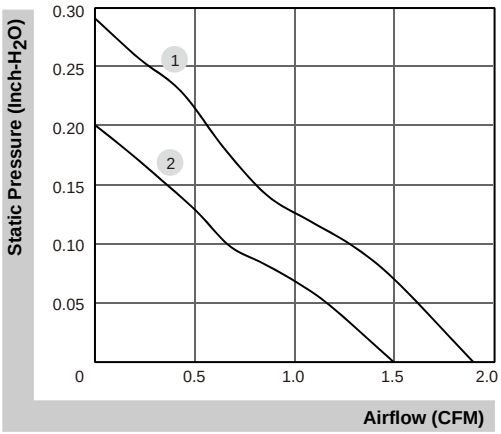


### External dimensions(mm)

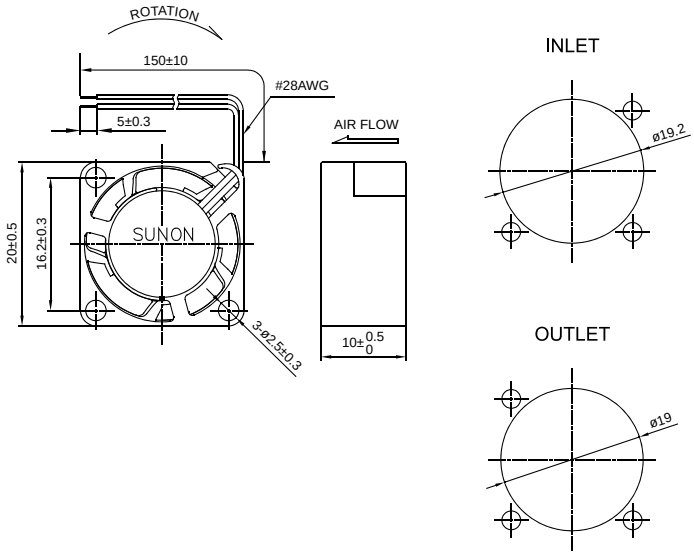


*All model could be customized. Please contact with Sunon Sales.
*Specifications are subject to change without notice. Please Visit SUNON website at www.sunon.com for update information.

# 25x25x6 mm

## 2.2~3.0 CFM

### Specifications

| MAGLev by SUNON | Bearing | Rating Voltage | Power Current | Power Consumption | Speed | Air Flow | Static Pressure | Noise | Weight | Curve |
|---|---|---|---|---|---|---|---|---|---|---|
| | ● VAPO | (VDC) | (mA) | (WATTS) | (RPM) | (CFM) | (inch-$H_2O$) | (dB(A)) | (g) | |
| MF25060V1-10000-A99 | ● | 5 | 115 | 0.58 | 13000 | 3.0 | 0.23 | 24.8 | 5.0 | 1 |
| MF25060V2-10000-A99 | ● | 5 | 75 | 0.38 | 10000 | 2.2 | 0.16 | 18.0 | 5.0 | 2 |

### Air Flow-Static Pressure Characteristics

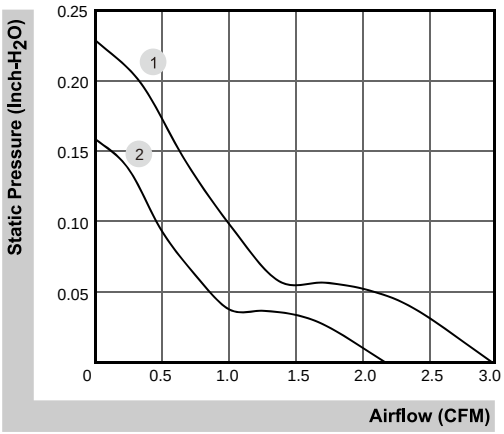


### External dimensions(mm)

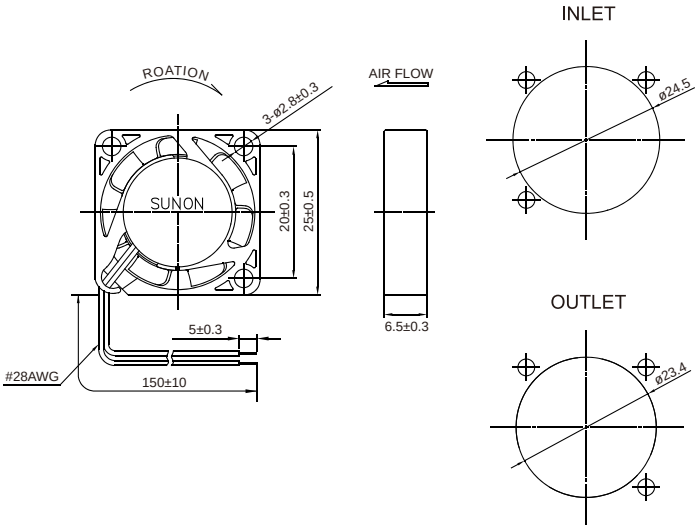


*All model could be customized. Please contact with Sunon Sales.
*Specifications are subject to change without notice. Please Visit SUNON website at www.sunon.com for update information.

# 25x25x10 mm

## 1.2~3.8 CFM

### Specifications

| MAGLev by SUNON | Bearing | Rating Voltage | Power Current | Power Consumption | Speed | Air Flow | Static Pressure | Noise | Weight | Curve |
|---|---|---|---|---|---|---|---|---|---|---|
| | ● VAPO | (VDC) | (mA) | (WATTS) | (RPM) | (CFM) | (inch-$H_2O$) | (dB(A)) | (g) | |
| MF25100V1-10000-A99 | ● | 5 | 105 | 0.53 | 13000 | 3.5 | 0.25 | 23.0 | 6.9 | 2 |
| MF25100V2-10000-A99 | ● | 5 | 65 | 0.33 | 9800 | 3.0 | 0.18 | 16.0 | 6.9 | 3 |
| MF25100V3-10000-A99 | ● | 5 | 40 | 0.20 | 6800 | 1.3 | 0.07 | 8.8 | 6.9 | 4 |
| MF25101V1-10000-A99 | ● | 12 | 50 | 0.60 | 14000 | 3.8 | 0.27 | 26.0 | 6.8 | 1 |
| MF25101V2-10000-A99 | ● | 12 | 30 | 0.36 | 9600 | 3.0 | 0.18 | 16.0 | 6.8 | 3 |
| MF25101V3-10000-A99 | ● | 12 | 17 | 0.21 | 6000 | 1.2 | 0.05 | 4.8 | 6.8 | 5 |

### Air Flow-Static Pressure Characteristics

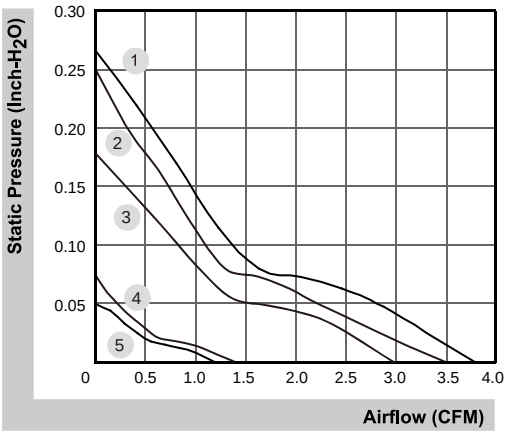


### External dimensions(mm)

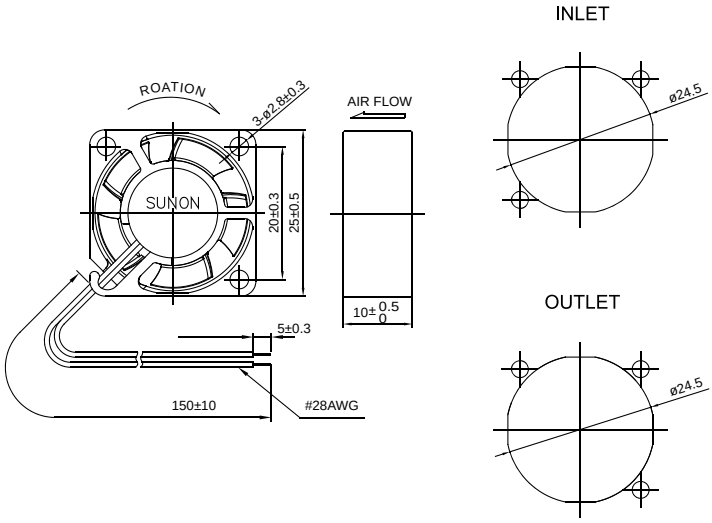


*All model could be customized. Please contact with Sunon Sales.
*Specifications are subject to change without notice. Please Visit SUNON website at www.sunon.com for update information.

# 25x25x15 mm

## 1.3~3.1 CFM

### Specifications

| MAGLev by SUNON | Bearing | Rating Voltage | Power Current | Power Consumption | Speed | Air Flow | Static Pressure | Noise | Weight | Curve |
|---|---|---|---|---|---|---|---|---|---|---|
| | ● VAPO | (VDC) | (mA) | (WATTS) | (RPM) | (CFM) | (inch-$H_2O$) | (dB(A)) | (g) | |
| MF25150V1-10000-A99 | ● | 5 | 85 | 0.43 | 10000 | 3.1 | 0.16 | 20.0 | 9.4 | 1 |
| MF25150V2-10000-A99 | ● | 5 | 46 | 0.23 | 6800 | 2.2 | 0.11 | 11.3 | 9.4 | 2 |
| MF25150V3-10000-A99 | ● | 5 | 35 | 0.18 | 5300 | 1.3 | 0.04 | 4.5 | 9.4 | 3 |

### Air Flow-Static Pressure Characteristics

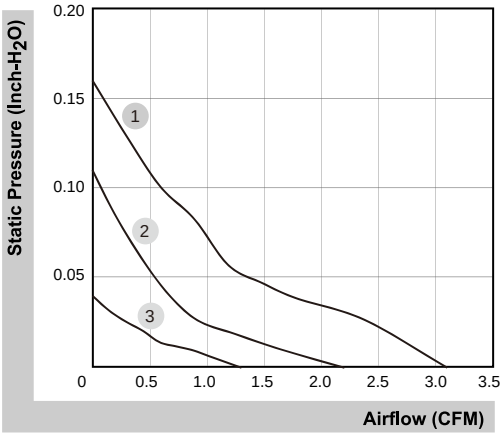


### External dimensions(mm)

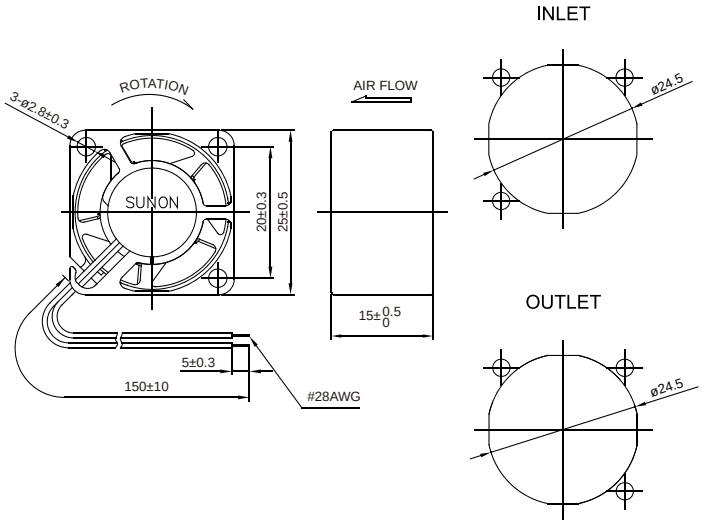


*All model could be customized. Please contact with Sunon Sales.
*Specifications are subject to change without notice. Please Visit SUNON website at www.sunon.com for update information.

# 30x30x6 mm

## 3.7~4.9 CFM

### Specifications

| MAGLev by SUNON | Bearing | Rating Voltage | Power Current | Power Consumption | Speed | Air Flow | Static Pressure | Noise | Weight | Curve |
|---|---|---|---|---|---|---|---|---|---|---|
| | ● VAPO | (VDC) | (mA) | (WATTS) | (RPM) | (CFM) | (inch-$H_2O$) | (dB(A)) | (g) | |
| MF30060V1-10000-A99 | ● | 5 | 112 | 0.56 | 9100 | 4.9 | 0.17 | 23.6 | 6.0 | 1 |
| MF30060V2-10000-A99 | ● | 5 | 72 | 0.36 | 7100 | 3.7 | 0.11 | 15.7 | 6.0 | 2 |

### Air Flow-Static Pressure Characteristics

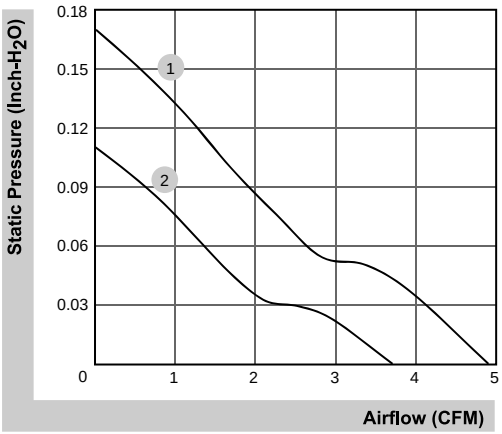


### External dimensions(mm)

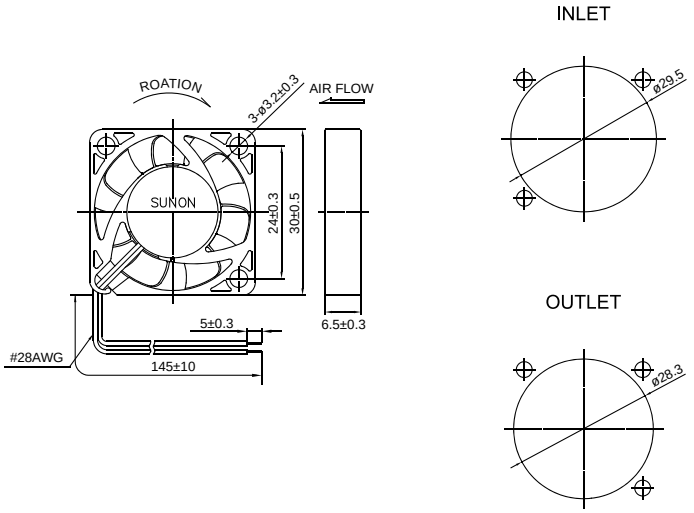


*All model could be customized. Please contact with Sunon Sales.
*Specifications are subject to change without notice. Please Visit SUNON website at www.sunon.com for update information.

# 30x30x10 mm

## 2.5~5.5 CFM

### Specifications

| MAGLev by SUNON | Bearing | Rating Voltage | Power Current | Power Consumption | Speed | Air Flow | Static Pressure | Noise | Weight | Curve |
|---|---|---|---|---|---|---|---|---|---|---|
| | ● VAPO | (VDC) | (mA) | (WATTS) | (RPM) | (CFM) | (inch-$H_2O$) | (dB(A)) | (g) | |
| MF30100V1-10000-A99 | ● | 5 | 120 | 0.60 | 11000 | 5.5 | 0.20 | 23.0 | 7.8 | 2 |
| MF30100V2-10000-A99 | ● | 5 | 80 | 0.40 | 9500 | 4.7 | 0.17 | 21.0 | 7.8 | 3 |
| MF30100V3-10000-A99 | ● | 5 | 45 | 0.23 | 6000 | 2.5 | 0.07 | 10.2 | 7.8 | 5 |
| MF30101V1-10000-A99 | ● | 12 | 55 | 0.66 | 11500 | 5.5 | 0.25 | 23.0 | 7.8 | 1 |
| MF30101V2-10000-A99 | ● | 12 | 32 | 0.39 | 8600 | 4.6 | 0.14 | 20.0 | 7.8 | 4 |

### Air Flow-Static Pressure Characteristics

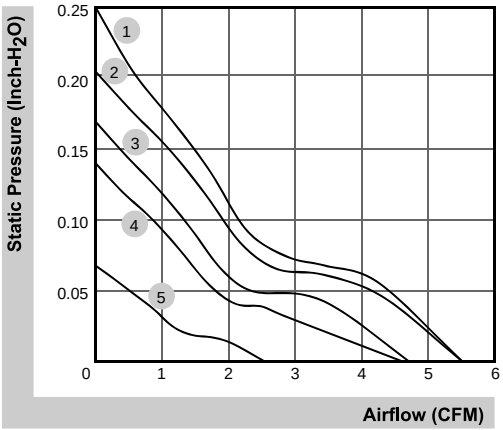


### External dimensions(mm)

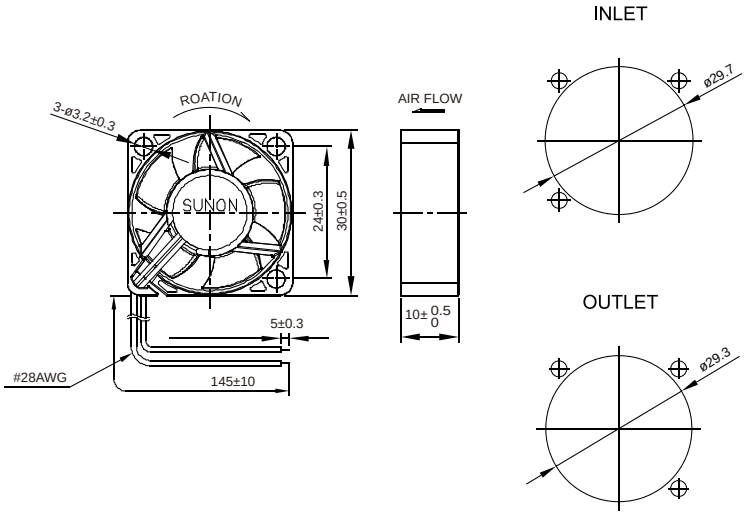


*All model could be customized. Please contact with Sunon Sales.
*Specifications are subject to change without notice. Please Visit SUNON website at www.sunon.com for update information.

# 30x30x10 mm

## 3.5 CFM

### Specifications

| MAGLev by SUNON | Bearing | Rating Voltage | Power Current | Power Consumption | Speed | Air Flow | Static Pressure | Noise | Weight | Curve |
|---|---|---|---|---|---|---|---|---|---|---|
| | ● VAPO | (VDC) | (mA) | (WATTS) | (RPM) | (CFM) | (inch-$H_2O$) | (dB(A)) | (g) | |
| HA30101V3-10000-A99 | ● | 12 | 25 | 0.30 | 7000 | 3.5 | 0.10 | 15.1 | 7.8 | 1 |

### Air Flow-Static Pressure Characteristics

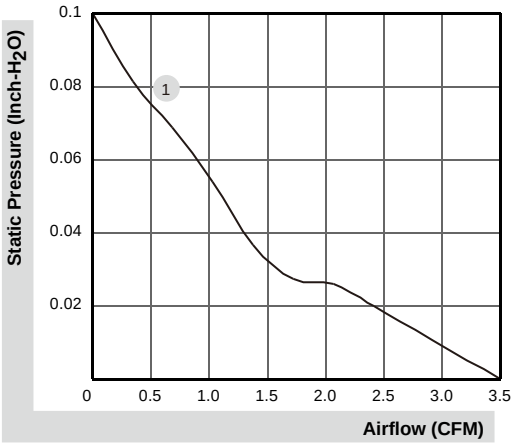


### External dimensions (mm)

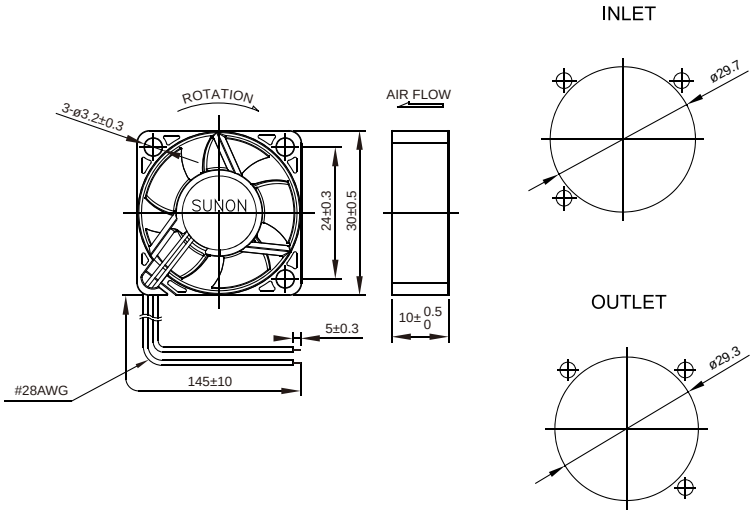


*All model could be customized. Please contact with Sunon Sales.
*Specifications are subject to change without notice. Please Visit SUNON website at www.sunon.com for update information.

# 30x30x15 mm

## 2.7~6.0 CFM

### Specifications

| MAGLev by SUNON | Bearing | Rating Voltage | Power Current | Power Consumption | Speed | Air Flow | Static Pressure | Noise | Weight | Curve |
|---|---|---|---|---|---|---|---|---|---|---|
| | ● VAPO | (VDC) | (mA) | (WATTS) | (RPM) | (CFM) | (inch-$H_2O$) | (dB(A)) | (g) | |
| MF30150V1-10000-A99 | ● | 5 | 140 | 0.70 | 9500 | 6.0 | 0.17 | 27.0 | 9.7 | 1 |
| MF30150V2-10000-A99 | ● | 5 | 80 | 0.40 | 7300 | 4.9 | 0.12 | 20.0 | 9.7 | 2 |
| MF30150V3-10000-A99 | ● | 5 | 45 | 0.23 | 5200 | 2.8 | 0.05 | 9.8 | 9.7 | 3 |
| MF30151V1-10000-A99 | ● | 12 | 65 | 0.78 | 9500 | 6.0 | 0.17 | 27.0 | 9.7 | 1 |
| MF30151V2-10000-A99 | ● | 12 | 35 | 0.42 | 7000 | 4.8 | 0.12 | 19.0 | 9.7 | 2 |
| MF30151V3-10000-A99 | ● | 12 | 20 | 0.24 | 4600 | 2.7 | 0.05 | 7.8 | 9.7 | 3 |

### Air Flow-Static Pressure Characteristics

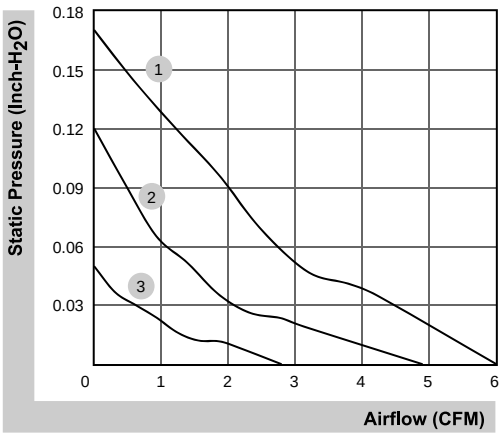


### External dimensions(mm)

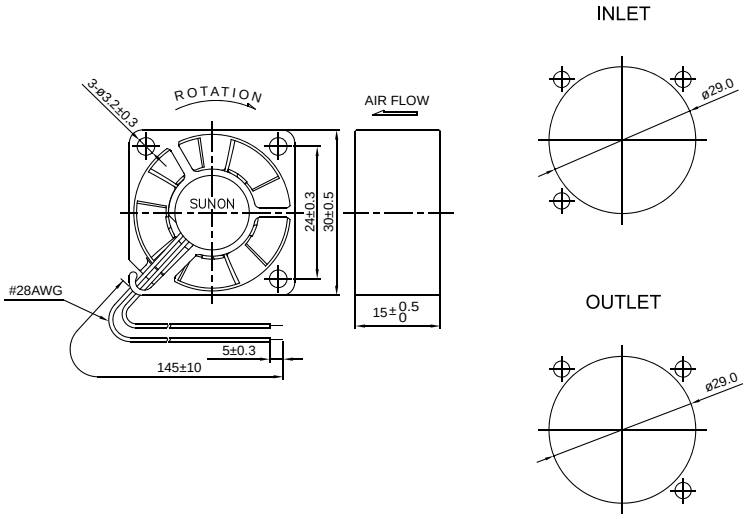


*All model could be customized. Please contact with Sunon Sales.
*Specifications are subject to change without notice. Please Visit SUNON website at www.sunon.com for update information.

# 35x35x6 mm

## 4.3~5.5 CFM

### Specifications

| MAGLev by SUNON | Bearing | Rating Voltage | Power Current | Power Consumption | Speed | Air Flow | Static Pressure | Noise | Weight | Curve |
|---|---|---|---|---|---|---|---|---|---|---|
| | ● VAPO | (VDC) | (mA) | (WATTS) | (RPM) | (CFM) | (inch-$H_2O$) | (dB(A)) | (g) | |
| MF35060V1-10000-A99 | ● | 12 | 120 | 0.60 | 7600 | 5.5 | 0.11 | 26.0 | 7.0 | 1 |
| MF35060V2-10000-A99 | ● | 12 | 66 | 0.33 | 5800 | 4.3 | 0.07 | 18.3 | 7.0 | 2 |

### Air Flow-Static Pressure Characteristics

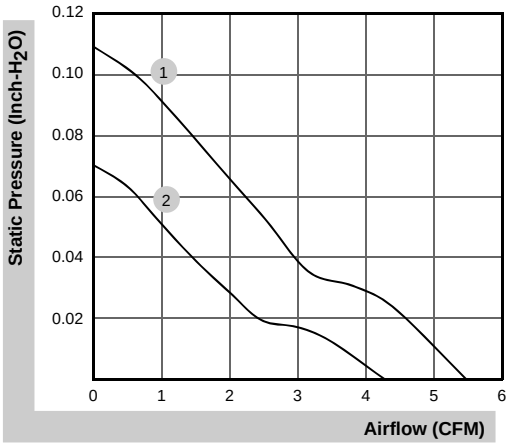


### External dimensions (mm)

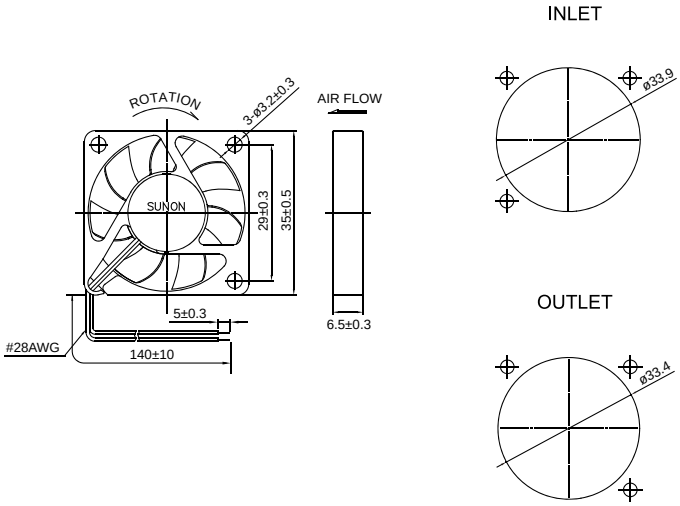


*All model could be customized. Please contact with Sunon Sales.
*Specifications are subject to change without notice. Please Visit SUNON website at www.sunon.com for update information.

# 35x35x10 mm

## 3.6~7.2 CFM

### Specifications

| MAGLev by SUNON | Bearing | Rating Voltage | Power Current | Power Consumption | Speed | Air Flow | Static Pressure | Noise | Weight | Curve |
|---|---|---|---|---|---|---|---|---|---|---|
| | ● VAPO | (VDC) | (mA) | (WATTS) | (RPM) | (CFM) | (inch-$H_2O$) | (dB(A)) | (g) | |
| MF35100V1-10000-A99 | ● | 5 | 135 | 0.68 | 10000 | 7.2 | 0.22 | 28.0 | 10.5 | 1 |
| MF35100V2-10000-A99 | ● | 5 | 80 | 0.40 | 7500 | 6.5 | 0.13 | 21.8 | 10.5 | 2 |
| MF35100V3-10000-A99 | ● | 5 | 45 | 0.23 | 5300 | 3.7 | 0.07 | 13.1 | 10.5 | 3 |
| MF35101V1-10000-A99 | ● | 12 | 60 | 0.72 | 10000 | 7.2 | 0.22 | 28.0 | 10.5 | 1 |
| MF35101V2-10000-A99 | ● | 12 | 35 | 0.42 | 7500 | 6.5 | 0.13 | 21.8 | 10.5 | 2 |
| MF35101V3-10000-A99 | ● | 12 | 20 | 0.24 | 5000 | 3.6 | 0.07 | 12.0 | 10.5 | 3 |

### Air Flow-Static Pressure Characteristics

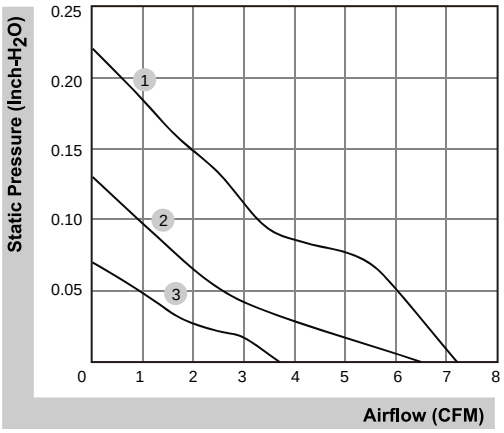


### External dimensions(mm)

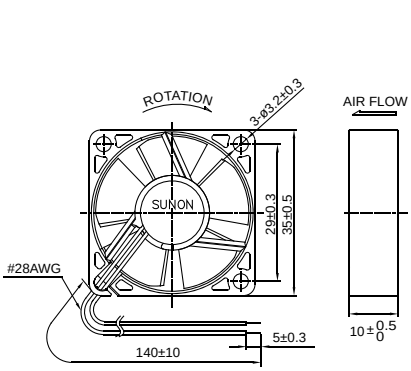


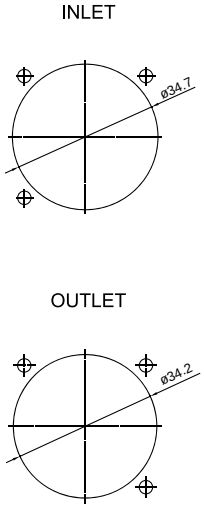


*All model could be customized. Please contact with Sunon Sales.
*Specifications are subject to change without notice. Please Visit SUNON website at www.sunon.com for update information.

# 40x40x6 mm

## 5.5~6.3 CFM

### Specifications

| MAGLev by SUNON | Bearing | Rating Voltage | Power Current | Power Consumption | Speed | Air Flow | Static Pressure | Noise | Weight | Curve |
|---|---|---|---|---|---|---|---|---|---|---|
| | ● VAPO | (VDC) | (mA) | (WATTS) | (RPM) | (CFM) | (inch-$H_2O$) | (dB(A)) | (g) | |
| MF40060V1-10000-A99 | ● | 5 | 87 | 0.44 | 7000 | 6.3 | 0.10 | 29.3 | 6.8 | 1 |
| MF40060V2-10000-A99 | ● | 5 | 65 | 0.33 | 6000 | 5.5 | 0.08 | 25.3 | 6.8 | 2 |

### Air Flow-Static Pressure Characteristics

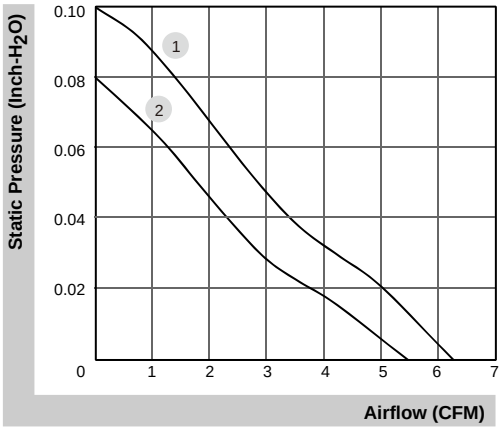


### External dimensions(mm)

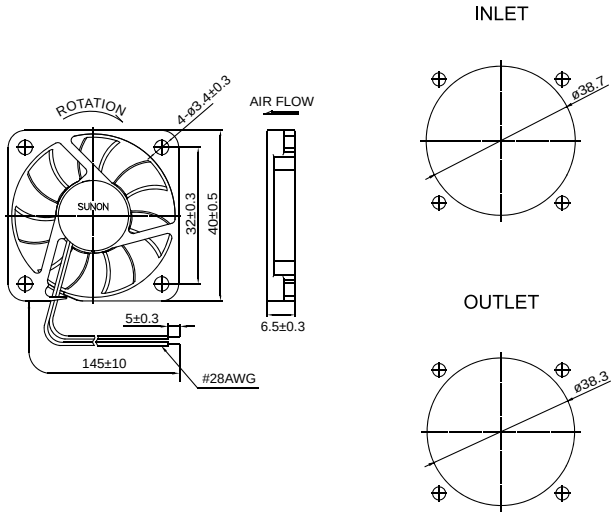


*All model could be customized. Please contact with Sunon Sales.
*Specifications are subject to change without notice. Please Visit SUNON website at www.sunon.com for update information.

# 40x40x10 mm

## 7.0~9.9 CFM

### Specifications

| MAGLev by SUNON | Bearing | Rating Voltage | Power Current | Power Consumption | Speed | Air Flow | Static Pressure | Noise | Weight | Curve |
|---|---|---|---|---|---|---|---|---|---|---|
| | ● VAPO | (VDC) | (mA) | (WATTS) | (RPM) | (CFM) | (inch-$H_2O$) | (dB(A)) | (g) | |
| MF40100V1-10000-A99 | ● | 5 | 136 | 0.68 | 7000 | 8.0 | 0.19 | 27.3 | 15.6 | 2 |
| MF40100V2-10000-A99 | ● | 5 | 94 | 0.47 | 5800 | 7.0 | 0.12 | 20.6 | 15.6 | 3 |
| MF40101VX-10000-A99 | ● | 12 | 87 | 1.05 | 8500 | 9.9 | 0.25 | 31.4 | 15.6 | 1 |
| MF40101V1-10000-A99 | ● | 12 | 51 | 0.62 | 7000 | 8.0 | 0.19 | 27.3 | 15.6 | 2 |
| MF40101V2-10000-A99 | ● | 12 | 40 | 0.48 | 5800 | 7.0 | 0.12 | 20.6 | 15.6 | 3 |

### Air Flow-Static Pressure Characteristics

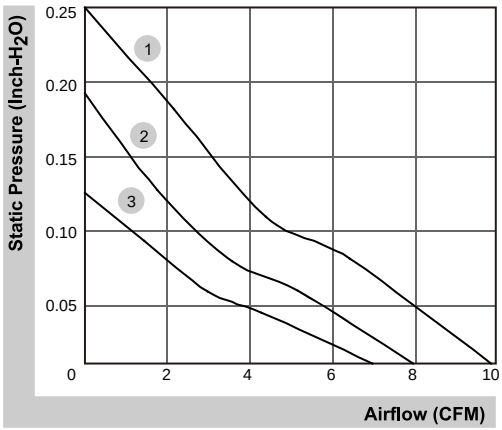


### External dimensions(mm)

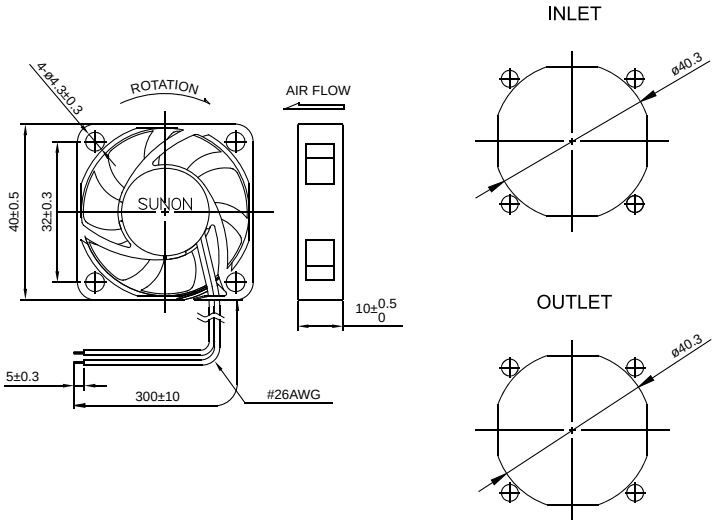


*All model could be customized. Please contact with Sunon Sales.
*Specifications are subject to change without notice. Please Visit SUNON website at www.sunon.com for update information.

# 40x40x10 mm

## 7.1~8.2 CFM

### Specifications

| Model | Bearing | Rating Voltage | Power Current | Power Consumption | Speed | Air Flow | Static Pressure | Noise | Weight | Curve |
|---|---|---|---|---|---|---|---|---|---|---|
| | ◐ 2BALL ○ Sleeve | (VDC) | (mA) | (WATTS) | (RPM) | (CFM) | (inch-$H_2O$) | (dB(A)) | (g) | |
| EE40100S1-10000-999 | ○ | 5 | 172 | 0.86 | 7300 | 8.2 | 0.19 | 28.2 | 15.6 | 1 |
| EE40100S2-10000-999 | ○ | 5 | 120 | 0.60 | 6100 | 7.1 | 0.12 | 23.0 | 15.6 | 2 |
| EE40101S1-10000-999 | ○ | 12 | 82 | 0.99 | 7300 | 8.2 | 0.19 | 28.2 | 15.6 | 1 |
| EE40101S2-10000-999 | ○ | 12 | 68 | 0.82 | 6100 | 7.1 | 0.12 | 23.0 | 15.6 | 2 |

### Air Flow-Static Pressure Characteristics

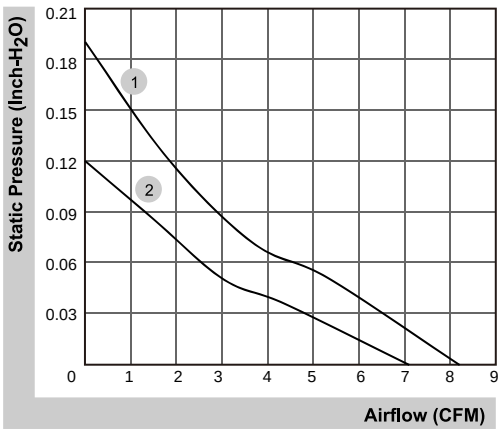


### External dimensions(mm)

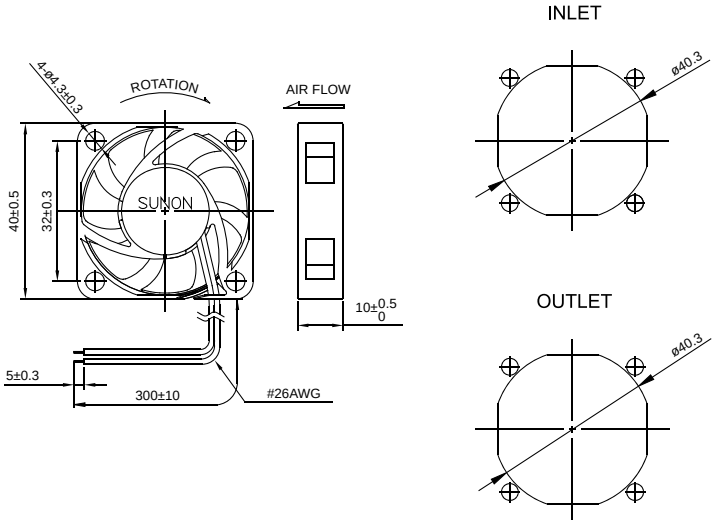


*All model could be customized. Please contact with Sunon Sales.
*Specifications are subject to change without notice. Please Visit SUNON website at www.sunon.com for update information.

# 40x40x10 mm

## 5.5~10.0 CFM

### Specifications

| Model | Bearing | Rating Voltage | Power Current | Power Consumption | Speed | Air Flow | Static Pressure | Noise | Weight | Curve |
|---|---|---|---|---|---|---|---|---|---|---|
| | ◐ 2BALL ○ Sleeve | (VDC) | (mA) | (WATTS) | (RPM) | (CFM) | (inch-$H_2O$) | (dB(A)) | (g) | |
| EF40101BX-10000-A99 | ◐ | 12 | 122 | 1.47 | 9000 | 10.0 | 0.27 | 33.7 | 15.8 | 1 |
| EF40101B1-10000-A99 | ◐ | 12 | 82 | 0.99 | 7000 | 8.0 | 0.19 | 27.3 | 15.8 | 2 |
| EF40101B2-10000-A99 | ◐ | 12 | 37 | 0.45 | 5000 | 5.5 | 0.10 | 17.7 | 15.8 | 3 |

### Air Flow-Static Pressure Characteristics

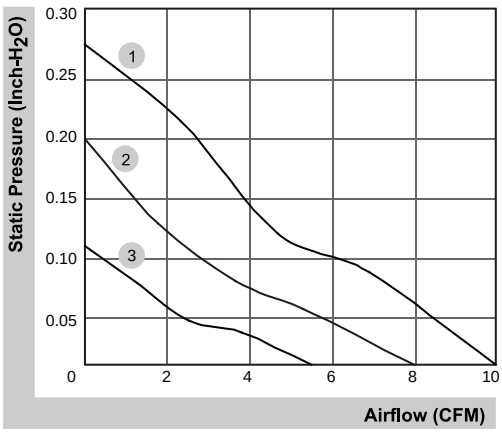


### External dimensions(mm)

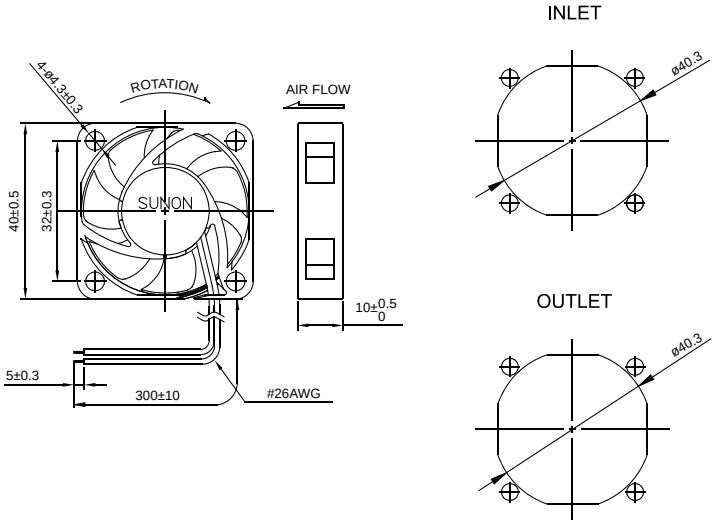


*All model could be customized. Please contact with Sunon Sales.
*Specifications are subject to change without notice. Please Visit SUNON website at www.sunon.com for update information.

# 40x40x10 mm

## 5.4 CFM

### Specifications

| MAGLev by SUNON | Bearing | Rating Voltage | Power Current | Power Consumption | Speed | Air Flow | Static Pressure | Noise | Weight | Curve |
|---|---|---|---|---|---|---|---|---|---|---|
| | ● VAPO | (VDC) | (mA) | (WATTS) | (RPM) | (CFM) | (inch-$H_2O$) | (dB(A)) | (g) | |
| HA40101V4-10000-A99 | ● | 12 | 31 | 0.38 | 5000 | 5.4 | 0.09 | 15.7 | 15.4 | 1 |

### Air Flow-Static Pressure Characteristics

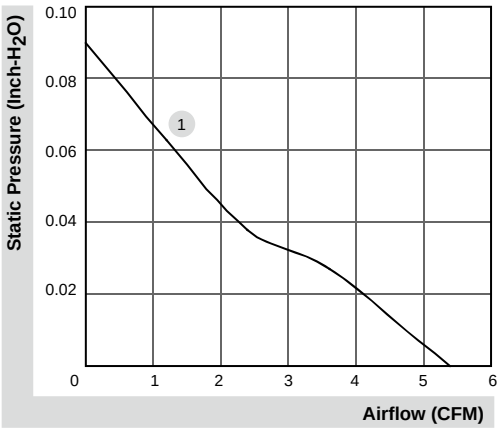


### External dimensions(mm)

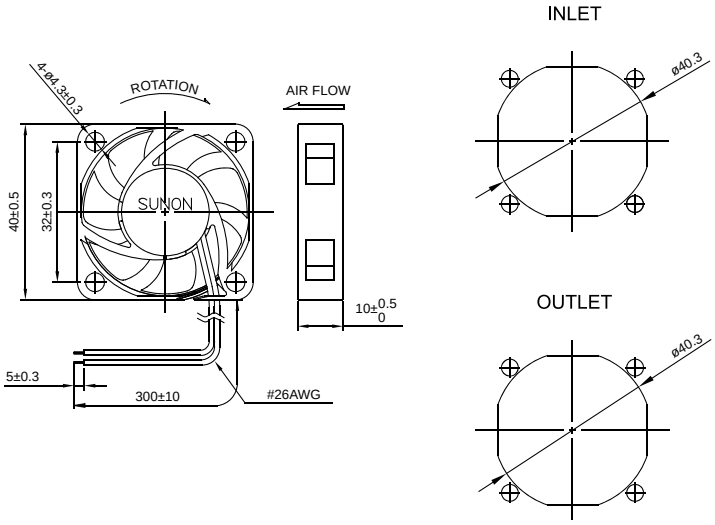


*All model could be customized. Please contact with Sunon Sales.
*Specifications are subject to change without notice. Please Visit SUNON website at www.sunon.com for update information.

# 40x40x20 mm

## 6.3~10.8 CFM

### Specifications

| MAGLev by SUNON | Bearing | Rating Voltage | Power Current | Power Consumption | Speed | Air Flow | Static Pressure | Noise | Weight | Curve |
|---|---|---|---|---|---|---|---|---|---|---|
| | ● VAPO | (VDC) | (mA) | (WATTS) | (RPM) | (CFM) | (inch-$H_2O$) | (dB(A)) | (g) | |
| MF40200V1-10000-A99 | ● | 5 | 150 | 0.75 | 7000 | 8.9 | 0.22 | 25.5 | 29.0 | 2 |
| MF40200V2-10000-A99 | ● | 5 | 107 | 0.54 | 6000 | 7.7 | 0.17 | 21.0 | 29.0 | 3 |
| MF40200V3-10000-A99 | ● | 5 | 75 | 0.38 | 5000 | 6.3 | 0.11 | 16.5 | 29.0 | 4 |
| MF40201VX-10000-A99 | ● | 12 | 80 | 0.96 | 8000 | 10.8 | 0.29 | 27.5 | 29.0 | 1 |
| MF40201V1-10000-A99 | ● | 12 | 58 | 0.70 | 7000 | 8.9 | 0.22 | 25.5 | 29.0 | 2 |
| MF40201V2-10000-A99 | ● | 12 | 45 | 0.54 | 6000 | 7.7 | 0.17 | 21.0 | 29.0 | 3 |
| MF40201V3-10000-A99 | ● | 12 | 38 | 0.46 | 5000 | 6.3 | 0.11 | 16.5 | 29.0 | 4 |
| MF40202VX-10000-A99 | ● | 24 | 39 | 0.94 | 8000 | 10.8 | 0.29 | 27.5 | 29.0 | 1 |
| MF40202V1-10000-A99 | ● | 24 | 32 | 0.77 | 7000 | 8.9 | 0.22 | 25.5 | 29.0 | 2 |
| MF40202V2-10000-A99 | ● | 24 | 25 | 0.60 | 6000 | 7.7 | 0.17 | 21.0 | 29.0 | 3 |

| Model | Bearing | Rating Voltage | Power Current | Power Consumption | Speed | Air Flow | Static Pressure | Noise | Weight | Curve |
|---|---|---|---|---|---|---|---|---|---|---|
| | ◐ 2BALL ○ Sleeve | (VDC) | (mA) | (WATTS) | (RPM) | (CFM) | (inch-$H_2O$) | (dB(A)) | (g) | |
| EE40201SX-10000-999 | ○ | 12 | 105 | 1.26 | 8000 | 10.8 | 0.29 | 27.5 | 29.0 | 1 |
| EE40201S1-10000-999 | ○ | 12 | 80 | 0.96 | 7000 | 8.9 | 0.22 | 25.5 | 29.0 | 2 |
| EE40201S2-10000-999 | ○ | 12 | 63 | 0.76 | 6000 | 7.7 | 0.17 | 21.0 | 29.0 | 3 |
| EE40201S3-10000-999 | ○ | 12 | 52 | 0.63 | 5000 | 6.3 | 0.11 | 16.5 | 29.0 | 4 |

### Air Flow-Static Pressure Characteristics

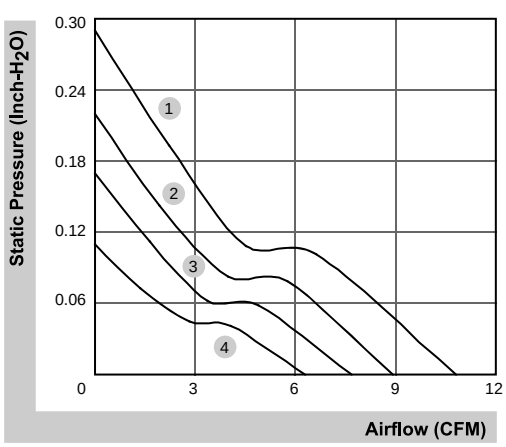


### External dimensions(mm)

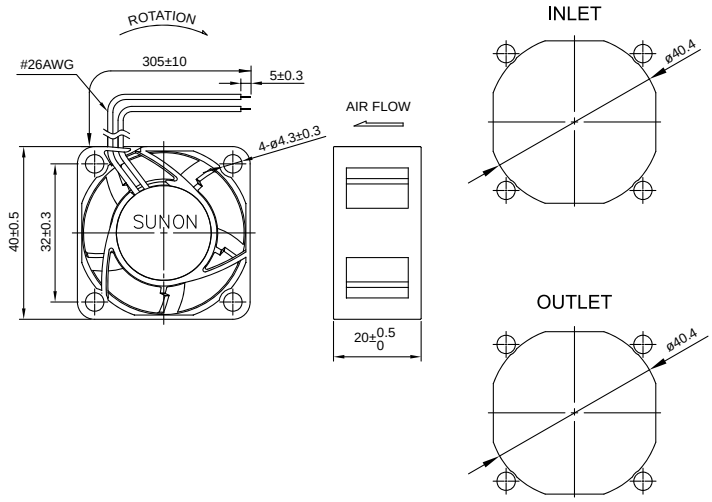


*All model could be customized. Please contact with Sunon Sales.
*Specifications are subject to change without notice. Please Visit SUNON website at www.sunon.com for update information.

# 40x40x20 mm

## 6.3~10.8 CFM

### Specifications

| Model | Bearing | Rating Voltage | Power Current | Power Consumption | Speed | Air Flow | Static Pressure | Noise | Weight | Curve |
|---|---|---|---|---|---|---|---|---|---|---|
| | ◐ 2BALL ○ Sleeve | (VDC) | (mA) | (WATTS) | (RPM) | (CFM) | (inch-$H_2O$) | (dB(A)) | (g) | |
| EF40201BX-0000-A99 | ◐ | 12 | 53 | 0.64 | 6800 | 10.8 | 0.27 | 28.5 | 32.5 | 1 |
| EF40201B1-0000-A99 | ◐ | 12 | 46 | 0.56 | 6300 | 8.9 | 0.22 | 26.5 | 32.5 | 2 |
| EF40201B2-0000-A99 | ◐ | 12 | 38 | 0.46 | 5400 | 7.7 | 0.16 | 22.0 | 32.5 | 3 |
| EF40201B3-0000-A99 | ◐ | 12 | 34 | 0.41 | 5000 | 6.3 | 0.14 | 19.0 | 32.5 | 4 |

### Air Flow-Static Pressure Characteristics

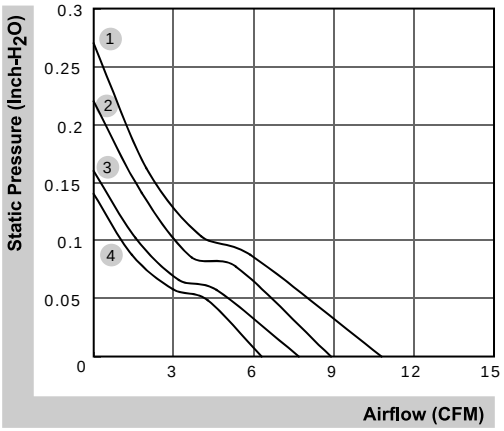


### External dimensions(mm)

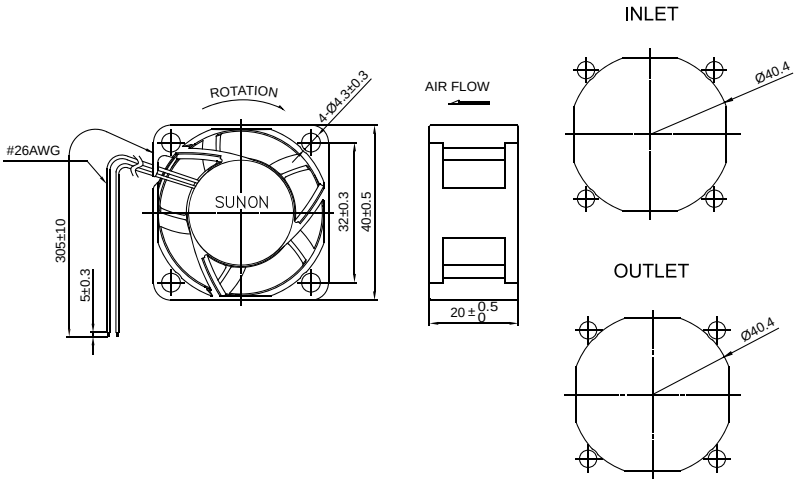


*All model could be customized. Please contact with Sunon Sales.
*Specifications are subject to change without notice. Please Visit SUNON website at www.sunon.com for update information.

# 40x40x20 mm

## 5.5 CFM

### Specifications

| MAGLev by SUNON | Bearing | Rating Voltage | Power Current | Power Consumption | Speed | Air Flow | Static Pressure | Noise | Weight | Curve |
|---|---|---|---|---|---|---|---|---|---|---|
| | ● VAPO | (VDC) | (mA) | (WATTS) | (RPM) | (CFM) | (inch-$H_2O$) | (dB(A)) | (g) | |
| HA40201V4-10000-A99 | ● | 12 | 31 | 0.38 | 4500 | 5.5 | 0.10 | 12.3 | 30.6 | 1 |

### Air Flow-Static Pressure Characteristics

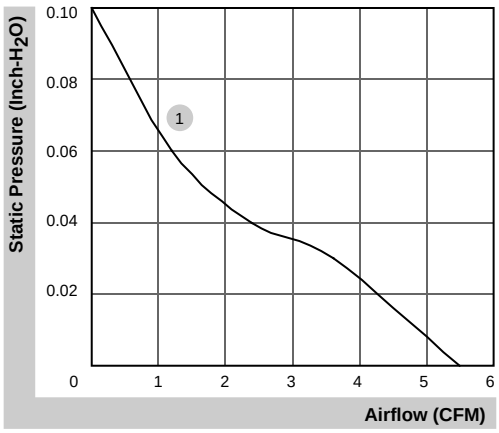


### External dimensions(mm)

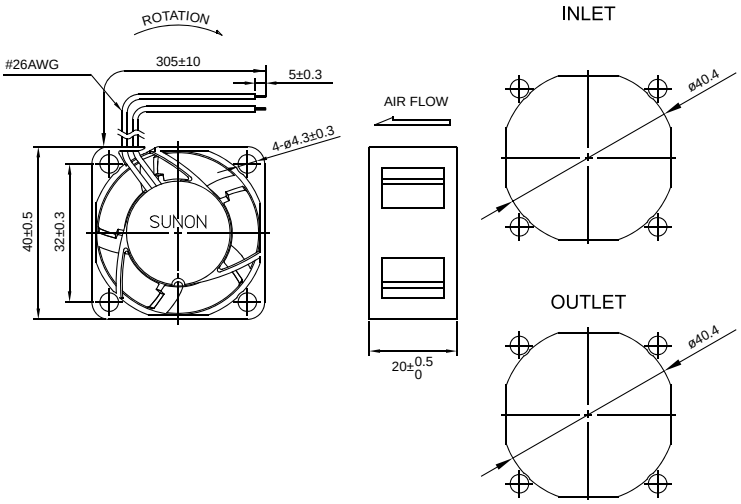


*All model could be customized. Please contact with Sunon Sales.
*Specifications are subject to change without notice. Please Visit SUNON website at www.sunon.com for update information.

# 45x45x10 mm

## 9.2~11.8 CFM

### Specifications

| MAGLev by SUNON | Bearing | Rating Voltage | Power Current | Power Consumption | Speed | Air Flow | Static Pressure | Noise | Weight | Curve |
|---|---|---|---|---|---|---|---|---|---|---|
| | ● VAPO | (VDC) | (mA) | (WATTS) | (RPM) | (CFM) | (inch-$H_2O$) | (dB(A)) | (g) | |
| ME45101V1-0000-A99 | ● | 12 | 110 | 1.32 | 6500 | 11.8 | 0.18 | 32.5 | 16.0 | 1 |
| MB45101V2-0000-A99 | ● | 12 | 105 | 1.26 | 5000 | 9.2 | 0.12 | 27.0 | 18.5 | 3 |

| Model | Bearing | Rating Voltage | Power Current | Power Consumption | Speed | Air Flow | Static Pressure | Noise | Weight | Curve |
|---|---|---|---|---|---|---|---|---|---|---|
| | ◐ 2BALL ○ Sleeve | (VDC) | (mA) | (WATTS) | (RPM) | (CFM) | (inch-$H_2O$) | (dB(A)) | (g) | |
| EE45101S1-0000-999 | ○ | 12 | 110 | 1.32 | 5700 | 10.5 | 0.16 | 31.0 | 16.0 | 2 |
| EB45101S2-0000-999 | ○ | 12 | 120 | 1.44 | 5000 | 9.2 | 0.12 | 27.0 | 18.5 | 3 |

### Air Flow-Static Pressure Characteristics

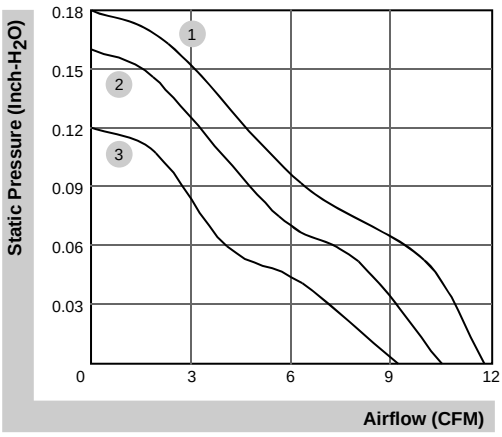


### External dimensions(mm)

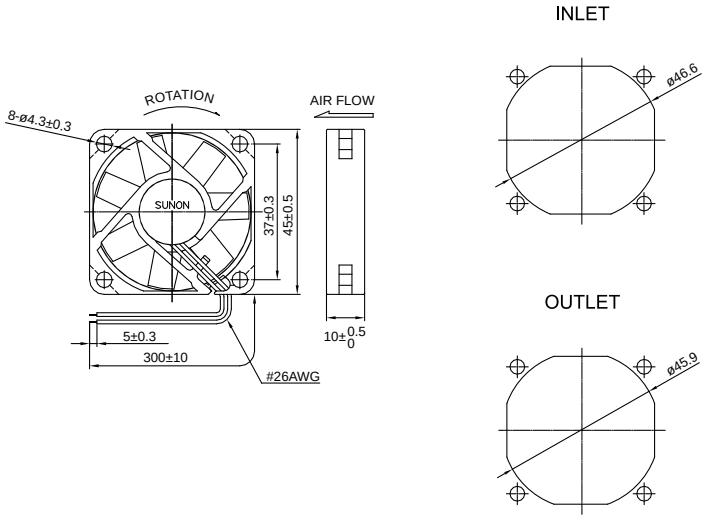


*All model could be customized. Please contact with Sunon Sales.
*Specifications are subject to change without notice. Please Visit SUNON website at www.sunon.com for update information.

# 50x50x10 mm

## 8.4~13.8 CFM

### Specifications

| MAGLev by SUNON | Bearing | Rating Voltage | Power Current | Power Consumption | Speed | Air Flow | Static Pressure | Noise | Weight | Curve |
|---|---|---|---|---|---|---|---|---|---|---|
| | ● VAPO | (VDC) | (mA) | (WATTS) | (RPM) | (CFM) | (inch-$H_2O$) | (dB(A)) | (g) | |
| MF50100V1-10000-A99 | ● | 5 | 155 | 0.78 | 5800 | 13.8 | 0.15 | 30.7 | 19.5 | 1 |
| MF50100V2-10000-A99 | ● | 5 | 85 | 0.43 | 4800 | 11.0 | 0.11 | 25.6 | 19.5 | 3 |
| MF50100V3-10000-A99 | ● | 5 | 75 | 0.38 | 4300 | 8.4 | 0.08 | 22.4 | 19.5 | 4 |
| MF50101V1-10000-A99 | ● | 12 | 70 | 0.84 | 5800 | 13.8 | 0.15 | 30.7 | 19.5 | 1 |
| MF50101V2-10000-A99 | ● | 12 | 50 | 0.60 | 4800 | 11.0 | 0.11 | 25.6 | 19.5 | 3 |
| MF50101V3-10000-A99 | ● | 12 | 37 | 0.45 | 4300 | 8.4 | 0.08 | 22.4 | 19.5 | 4 |

| Model | Bearing | Rating Voltage | Power Current | Power Consumption | Speed | Air Flow | Static Pressure | Noise | Weight | Curve |
|---|---|---|---|---|---|---|---|---|---|---|
| | ◐ 2BALL ○ Sleeve | (VDC) | (mA) | (WATTS) | (RPM) | (CFM) | (inch-$H_2O$) | (dB(A)) | (g) | |
| EE50101S1-10000-999 | ○ | 12 | 90 | 1.08 | 5700 | 13.0 | 0.14 | 30.7 | 19.5 | 2 |
| EE50101S2-10000-999 | ○ | 12 | 75 | 0.90 | 4700 | 11.0 | 0.11 | 25.6 | 19.5 | 3 |

### Air Flow-Static Pressure Characteristics

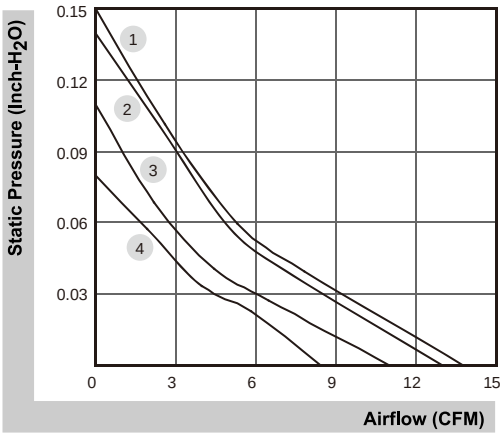


### External dimensions(mm)

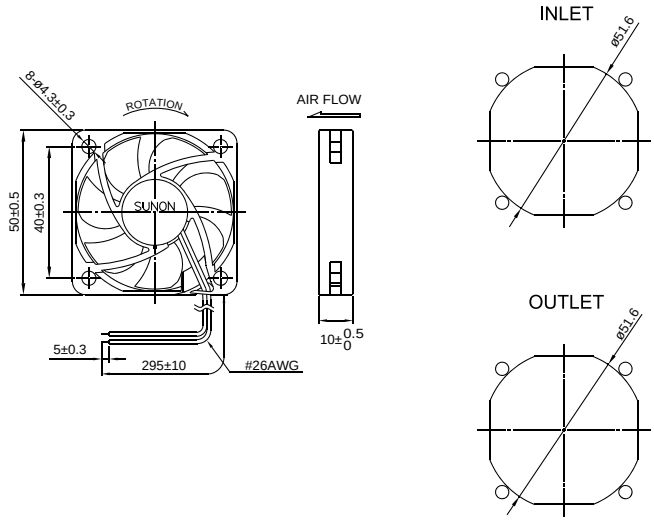


*All model could be customized. Please contact with Sunon Sales.
*Specifications are subject to change without notice. Please Visit SUNON website at www.sunon.com for update information.

# 50x50x15 mm

## 10.2~18.6 CFM

### Specifications

| MAGLev by SUNON | Bearing | Rating Voltage | Power Current | Power Consumption | Speed | Air Flow | Static Pressure | Noise | Weight | Curve |
|---|---|---|---|---|---|---|---|---|---|---|
| | ● VAPO | (VDC) | (mA) | (WATTS) | (RPM) | (CFM) | (inch-$H_2O$) | (dB(A)) | (g) | |
| MF50151VX-10000-A99 | ● | 12 | 100 | 1.20 | 7200 | 18.6 | 0.31 | 38.1 | 33.0 | 1 |
| MF50151V1-10000-A99 | ● | 12 | 66 | 0.80 | 6100 | 17.0 | 0.23 | 33.0 | 33.0 | 2 |
| MF50151V2-10000-A99 | ● | 12 | 42 | 0.51 | 5000 | 13.0 | 0.17 | 29.0 | 33.0 | 3 |
| MF50151V3-10000-A99 | ● | 12 | 28 | 0.34 | 3800 | 10.2 | 0.12 | 20.1 | 33.0 | 4 |
| MF50152VX-10000-A99 | ● | 24 | 55 | 1.32 | 7200 | 18.6 | 0.31 | 38.1 | 33.0 | 1 |
| MF50152V1-10000-A99 | ● | 24 | 42 | 1.01 | 6100 | 17.0 | 0.23 | 33.0 | 33.0 | 2 |
| MF50152V2-10000-A99 | ● | 24 | 27 | 0.65 | 5000 | 13.0 | 0.17 | 29.0 | 33.0 | 3 |

### Air Flow-Static Pressure Characteristics

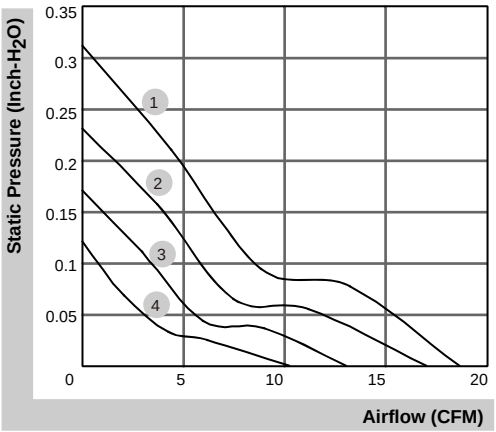


### External dimensions(mm)

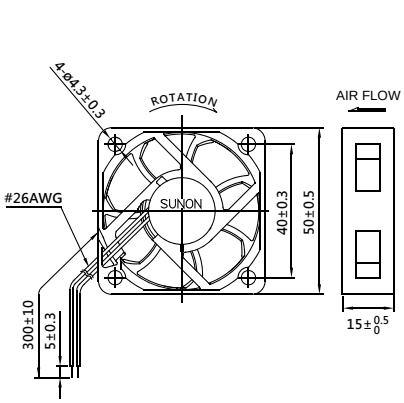


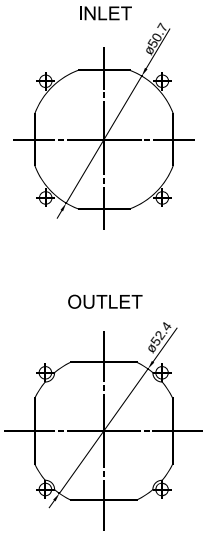


*All model could be customized. Please contact with Sunon Sales.
*Specifications are subject to change without notice. Please Visit SUNON website at www.sunon.com for update information.

# 50x50x15 mm

## 7.7 CFM

### Specifications

| MAGLev by SUNON | Bearing | Rating Voltage | Power Current | Power Consumption | Speed | Air Flow | Static Pressure | Noise | Weight | Curve |
|---|---|---|---|---|---|---|---|---|---|---|
| | ● VAPO | (VDC) | (mA) | (WATTS) | (RPM) | (CFM) | (inch-$H_2O$) | (dB(A)) | (g) | |
| HA50151V4-10000-A99 | ● | 12 | 25 | 0.30 | 3200 | 7.7 | 0.07 | 15.4 | 33.0 | 1 |

### Air Flow-Static Pressure Characteristics

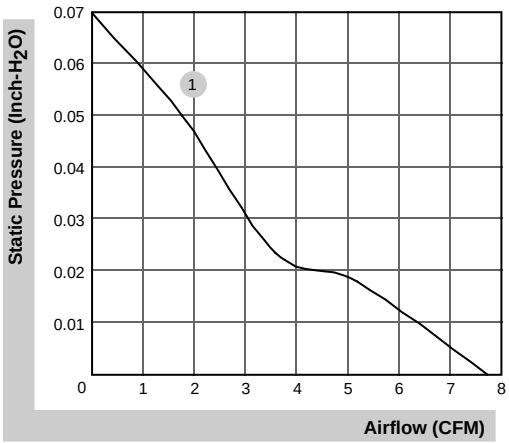


### External dimensions(mm)

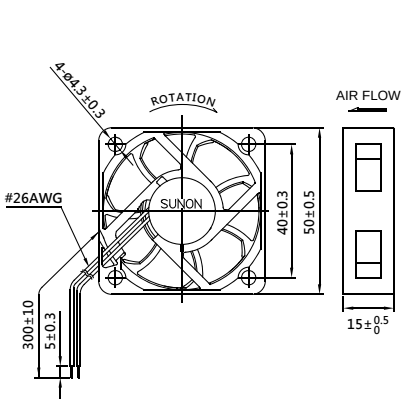


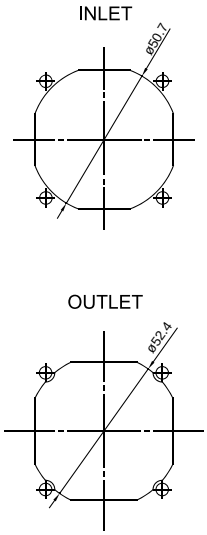


*All model could be customized. Please contact with Sunon Sales.
*Specifications are subject to change without notice. Please Visit SUNON website at www.sunon.com for update information.

# 60x60x10 mm

## 12.2~16.3 CFM

### Specifications

| MAGLev by SUNON | Bearing | Rating Voltage | Power Current | Power Consumption | Speed | Air Flow | Static Pressure | Noise | Weight | Curve |
|---|---|---|---|---|---|---|---|---|---|---|
| | ● VAPO | (VDC) | (mA) | (WATTS) | (RPM) | (CFM) | (inch-$H_2O$) | (dB(A)) | (g) | |
| MF60101V1-10000-A99 | ● | 12 | 108 | 1.30 | 4000 | 16.3 | 0.12 | 28.5 | 23.0 | 1 |
| MF60101V2-10000-A99 | ● | 12 | 75 | 0.90 | 3500 | 14.3 | 0.10 | 25.0 | 23.0 | 2 |
| MF60101V3-10000-A99 | ● | 12 | 46 | 0.56 | 3000 | 12.2 | 0.08 | 20.5 | 23.0 | 3 |

### Air Flow-Static Pressure Characteristics

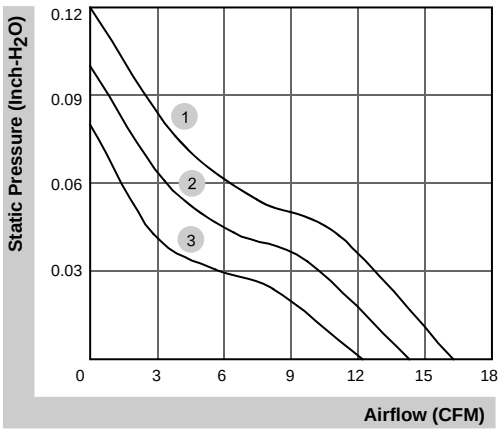


### External dimensions(mm)

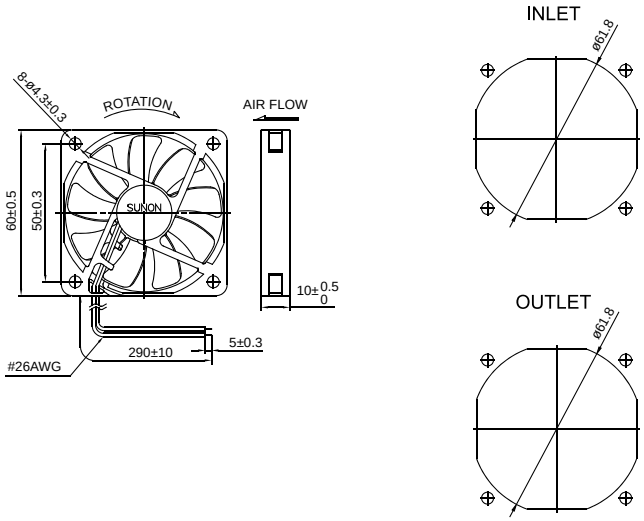


*All model could be customized. Please contact with Sunon Sales.
*Specifications are subject to change without notice. Please Visit SUNON website at www.sunon.com for update information.

# 60x60x15 mm

## 17.6~30.4 CFM

### Specifications

| MAGLev by SUNON | Bearing | Rating Voltage | Power Current | Power Consumption | Speed | Air Flow | Static Pressure | Noise | Weight | Curve |
|---|---|---|---|---|---|---|---|---|---|---|
| | ● VAPO | (VDC) | (mA) | (WATTS) | (RPM) | (CFM) | (inch-$H_2O$) | (dB(A)) | (g) | |
| MF60151VX-10000-A99 | ● | 12 | 185 | 2.22 | 5400 | 30.4 | 0.22 | 36.2 | 35.5 | 1 |
| MF60151V1-10000-A99 | ● | 12 | 127 | 1.53 | 4700 | 26.4 | 0.18 | 34.2 | 35.5 | 2 |
| MF60151V2-10000-A99 | ● | 12 | 68 | 0.82 | 3900 | 22.8 | 0.14 | 29.2 | 35.5 | 3 |
| MF60151V3-10000-A99 | ● | 12 | 48 | 0.58 | 3000 | 17.6 | 0.12 | 21.3 | 35.5 | 4 |
| MF60152VX-10000-A99 | ● | 24 | 85 | 2.04 | 5400 | 30.4 | 0.22 | 36.2 | 35.5 | 1 |
| MF60152V1-10000-A99 | ● | 24 | 75 | 1.80 | 4700 | 26.4 | 0.18 | 34.2 | 35.5 | 2 |
| MF60152V2-10000-A99 | ● | 24 | 40 | 0.96 | 3900 | 22.8 | 0.14 | 29.2 | 35.5 | 3 |

### Air Flow-Static Pressure Characteristics

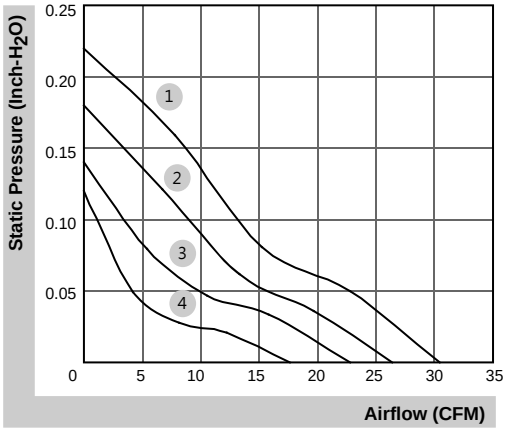


### External dimensions(mm)

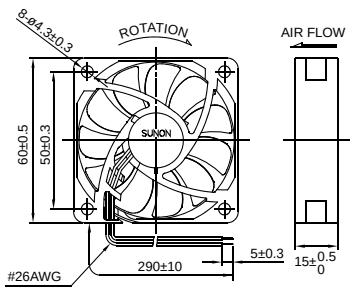


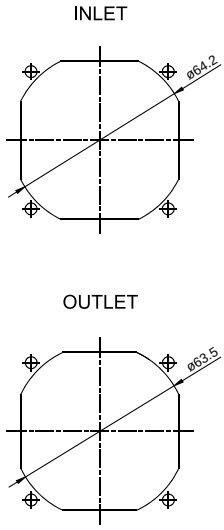


*All model could be customized. Please contact with Sunon Sales.
*Specifications are subject to change without notice. Please Visit SUNON website at www.sunon.com for update information.

# 60x60x15 mm

## 12.7 CFM

### Specifications

| MAGLev by SUNON | Bearing | Rating Voltage | Power Current | Power Consumption | Speed | Air Flow | Static Pressure | Noise | Weight | Curve |
|---|---|---|---|---|---|---|---|---|---|---|
| | ● VAPO | (VDC) | (mA) | (WATTS) | (RPM) | (CFM) | (inch-$H_2O$) | (dB(A)) | (g) | |
| HA60151V4-10000-A99 | ● | 12 | 22 | 0.27 | 2200 | 12.7 | 0.04 | 14.5 | 35.0 | 1 |

### Air Flow-Static Pressure Characteristics

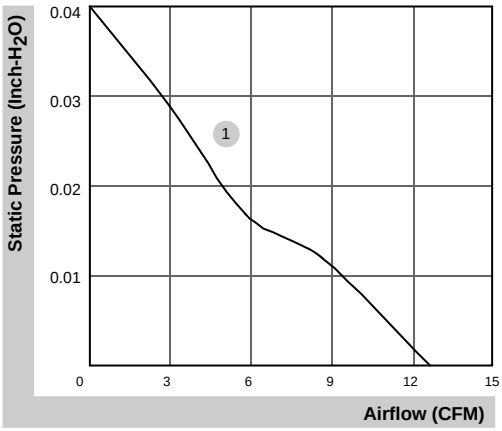


### External dimensions(mm)

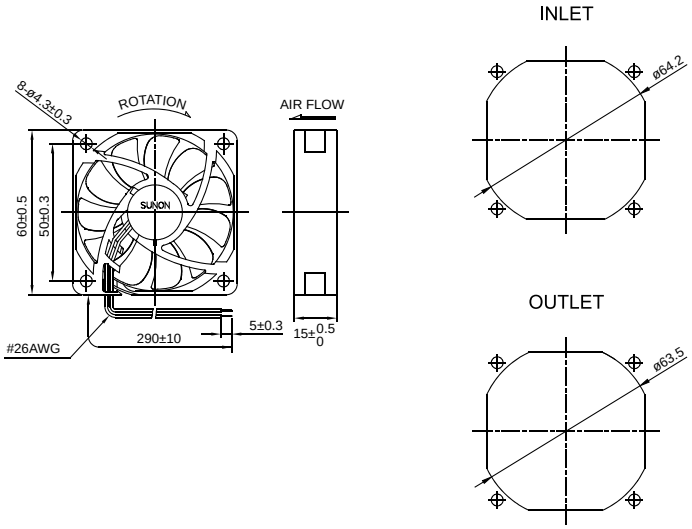


*All model could be customized. Please contact with Sunon Sales.
*Specifications are subject to change without notice. Please Visit SUNON website at www.sunon.com for update information.

# 60x60x15 mm (IP56)

## 10.6~21.3 CFM

### Specifications

| IP56 Model | Bearing | Rating Voltage | Power Current | Power Consumption | Speed | Air Flow | Static Pressure | Noise | Weight | Curve |
|---|---|---|---|---|---|---|---|---|---|---|
| | ⊗ 2BALL ○ Sleeve | (VDC) | (mA) | (WATTS) | (RPM) | (CFM) | (inch-$H_2O$) | (dB(A)) | (g) | |
| GF60151B6-1E000-AC9 | ⊗ | 12 | 125 | 1.50 | 4500 | 21.3 | 0.18 | 34.5 | 47.0 | 1 |
| GF60151B7-1E000-AC9 | ⊗ | 12 | 80 | 0.96 | 3900 | 18.2 | 0.13 | 29.8 | 47.0 | 2 |
| GF60151B8-1E000-AC9 | ⊗ | 12 | 70 | 0.84 | 3200 | 14.5 | 0.09 | 24.9 | 47.0 | 3 |
| GF60151B9-1E000-AC9 | ⊗ | 12 | 32 | 0.39 | 2300 | 10.6 | 0.05 | 17.1 | 47.0 | 4 |

### Air Flow-Static Pressure Characteristics

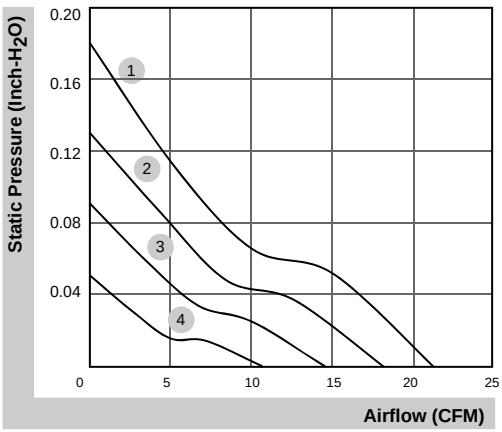


### External dimensions(mm)

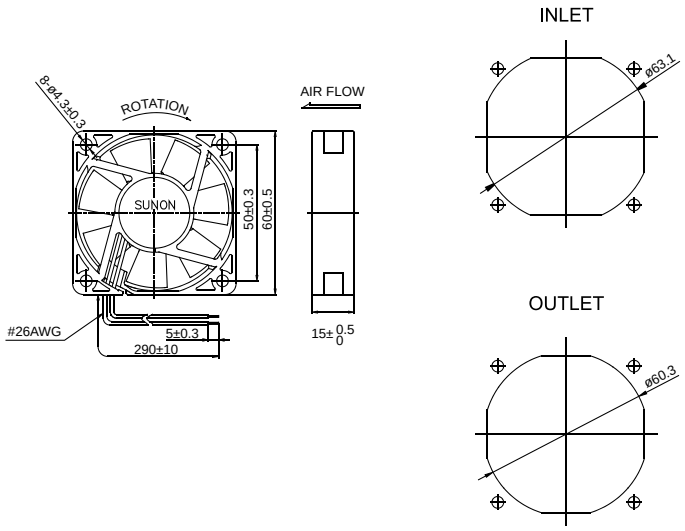


*All model could be customized. Please contact with Sunon Sales.
*Specifications are subject to change without notice. Please Visit SUNON website at www.sunon.com for update information.

# 60x60x15 mm (IP68)

## 10.6~21.3 CFM

### Specifications

| Model | Bearing | Rating Voltage | Power Current | Power Consumption | Speed | Air Flow | Static Pressure | Noise | Weight | Curve |
|---|---|---|---|---|---|---|---|---|---|---|
| | ⊕ 2BALL ○ Sleeve | (VDC) | (mA) | (WATTS) | (RPM) | (CFM) | (inch-$H_2O$) | (dB(A)) | (g) | |
| GF60151B6-1E000-AE9 | ⊕ | 12 | 125 | 1.50 | 4500 | 21.3 | 0.18 | 34.5 | 47.0 | 1 |
| GF60151B7-1E000-AE9 | ⊕ | 12 | 80 | 0.96 | 3900 | 18.2 | 0.13 | 29.8 | 47.0 | 2 |
| GF60151B8-1E000-AE9 | ⊕ | 12 | 70 | 0.84 | 3200 | 14.5 | 0.09 | 24.9 | 47.0 | 3 |
| GF60151B9-1E000-AE9 | ⊕ | 12 | 32 | 0.39 | 2300 | 10.6 | 0.05 | 17.1 | 47.0 | 4 |

### Air Flow-Static Pressure Characteristics

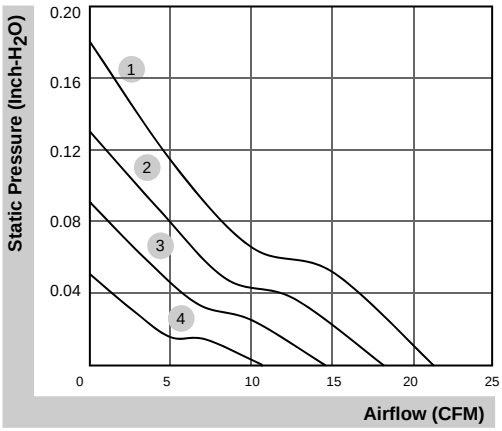


### External dimensions(mm)

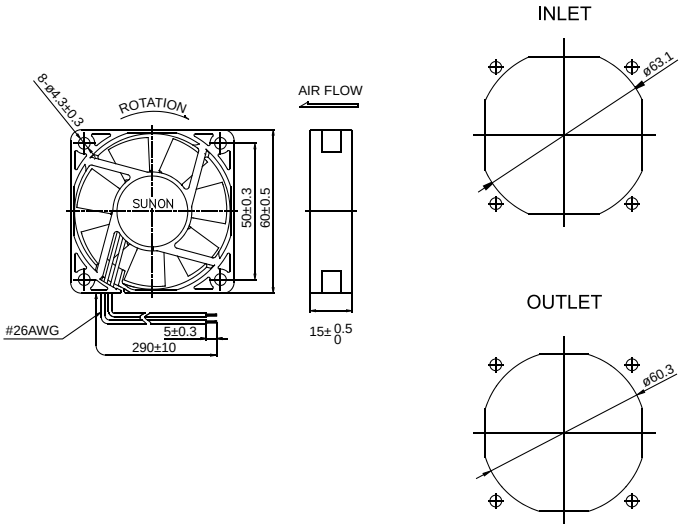


*All model could be customized. Please contact with Sunon Sales.
*Specifications are subject to change without notice. Please Visit SUNON website at www.sunon.com for update information.

# 60x60x20 mm

## 16.8~22.6 CFM

### Specifications

| Model | Bearing | Rating Voltage | Power Current | Power Consumption | Speed | Air Flow | Static Pressure | Noise | Weight | Curve |
|---|---|---|---|---|---|---|---|---|---|---|
| | ◐ 2BALL ○ Sleeve | (VDC) | (mA) | (WATTS) | (RPM) | (CFM) | (inch-$H_2O$) | (dB(A)) | (g) | |
| EE60201S1-10000-999 | ○ | 12 | 115 | 1.38 | 4700 | 22.6 | 0.18 | 32.5 | 50.0 | 1 |
| EE60201S2-10000-999 | ○ | 12 | 82 | 0.99 | 3900 | 18.5 | 0.14 | 26.3 | 50.0 | 2 |
| EE60201S3-10000-999 | ○ | 12 | 58 | 0.70 | 3200 | 16.8 | 0.10 | 22.0 | 50.0 | 3 |

### Air Flow-Static Pressure Characteristics

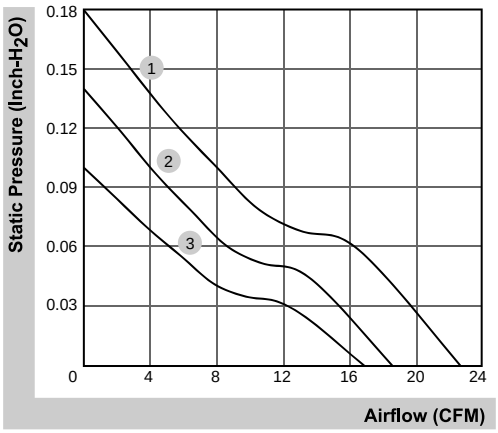


### External dimensions (mm)

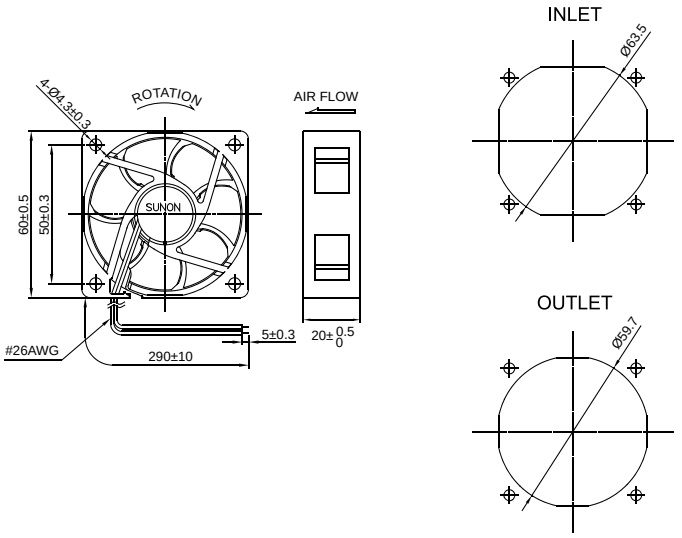


*All model could be customized. Please contact with Sunon Sales.
*Specifications are subject to change without notice. Please Visit SUNON website at www.sunon.com for update information.

# 60x60x20 mm

## 16.5~25.5 CFM

### Specifications

| MAGLev by SUNON | Bearing | Rating Voltage | Power Current | Power Consumption | Speed | Air Flow | Static Pressure | Noise | Weight | Curve |
|---|---|---|---|---|---|---|---|---|---|---|
| | ● VAPO | (VDC) | (mA) | (WATTS) | (RPM) | (CFM) | (inch-$H_2O$) | (dB(A)) | (g) | |
| MF60201VX-10000-A99 | ● | 12 | 142 | 1.71 | 5700 | 25.5 | 0.27 | 39.0 | 50.0 | 1 |
| MF60201V1-10000-A99 | ● | 12 | 100 | 1.20 | 5000 | 23.0 | 0.21 | 33.5 | 50.0 | 2 |
| MF60201V2-10000-A99 | ● | 12 | 65 | 0.78 | 4200 | 19.0 | 0.16 | 28.0 | 50.0 | 3 |
| MF60201V3-10000-A99 | ● | 12 | 40 | 0.48 | 3100 | 16.5 | 0.10 | 21.0 | 50.0 | 4 |
| MF60202VX-10000-A99 | ● | 24 | 75 | 1.80 | 5700 | 25.5 | 0.27 | 39.0 | 50.0 | 1 |
| MF60202V1-10000-A99 | ● | 24 | 55 | 1.32 | 5000 | 23.0 | 0.21 | 33.5 | 50.0 | 2 |
| MF60202V2-10000-A99 | ● | 24 | 35 | 0.84 | 4200 | 19.0 | 0.16 | 28.0 | 50.0 | 3 |
| MF60202V3-10000-A99 | ● | 24 | 22 | 0.53 | 3100 | 16.5 | 0.10 | 21.0 | 50.0 | 4 |

### Air Flow-Static Pressure Characteristics

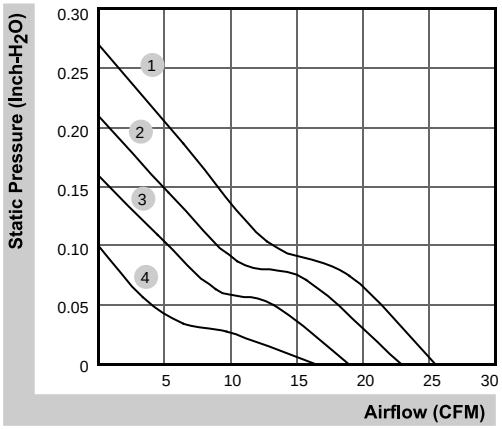


### External dimensions(mm)

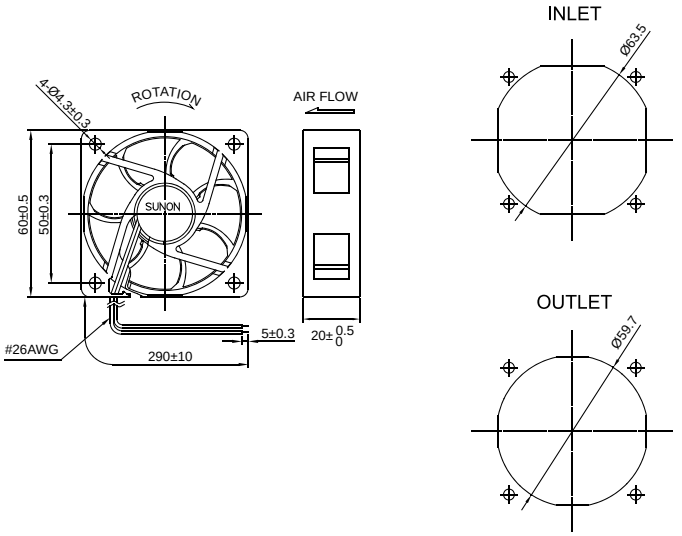


*All model could be customized. Please contact with Sunon Sales.
*Specifications are subject to change without notice. Please Visit SUNON website at www.sunon.com for update information.

# 60x60x20 mm

## 16.0~30.5 CFM

### Specifications

| Model | Bearing | Rating Voltage | Power Current | Power Consumption | Speed | Air Flow | Static Pressure | Noise | Weight | Curve |
|---|---|---|---|---|---|---|---|---|---|---|
| | ◐ 2BALL ○ Sleeve | (VDC) | (mA) | (WATTS) | (RPM) | (CFM) | (inch-$H_2O$) | (dB(A)) | (g) | |
| PE60201BX-0000-A99 | ◐ | 12 | 230 | 2.76 | 5500 | 30.5 | 0.35 | 41.0 | 52.0 | 1 |
| PE60201B1-0000-A99 | ◐ | 12 | 192 | 2.30 | 5000 | 27.5 | 0.28 | 39.0 | 52.0 | 2 |
| PE60201B2-0000-A99 | ◐ | 12 | 148 | 1.78 | 4400 | 23.5 | 0.20 | 35.0 | 52.0 | 3 |
| PE60201B3-0000-A99 | ◐ | 12 | 103 | 1.24 | 3600 | 19.5 | 0.15 | 30.0 | 52.0 | 4 |
| PE60201B4-0000-A99 | ◐ | 12 | 81 | 0.97 | 3000 | 16.0 | 0.10 | 24.0 | 52.0 | 5 |

### Air Flow-Static Pressure Characteristics

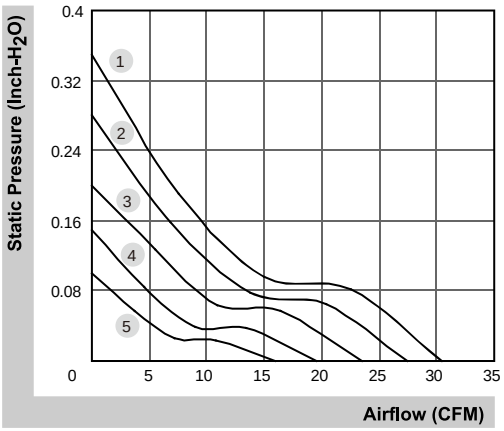


### External dimensions(mm)

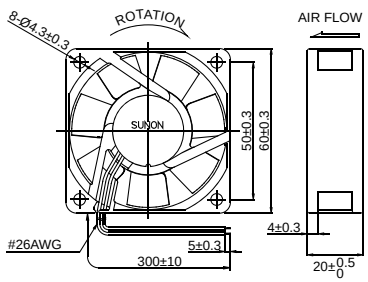


INLET

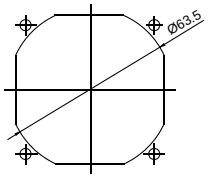


OUTLET

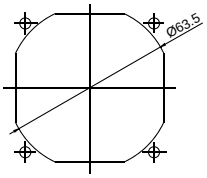


*All model could be customized. Please contact with Sunon Sales.
*Specifications are subject to change without notice. Please Visit SUNON website at www.sunon.com for update information.

# 60x60x20 mm

## 14.1~23.0 CFM

### Specifications

| Model | Bearing | Rating Voltage | Power Current | Power Consumption | Speed | Air Flow | Static Pressure | Noise | Weight | Curve |
|---|---|---|---|---|---|---|---|---|---|---|
| | ◐ 2BALL ○ Sleeve | (VDC) | (mA) | (WATTS) | (RPM) | (CFM) | (inch-$H_2O$) | (dB(A)) | (g) | |
| EE60201B1-0000-999 | ◐ | 12 | 135 | 1.62 | 4500 | 23.0 | 0.18 | 34.5 | 52.0 | 1 |
| EE60201B2-0000-999 | ◐ | 12 | 95 | 1.14 | 3700 | 19.0 | 0.14 | 29.0 | 52.0 | 2 |
| EE60201B3-0000-999 | ◐ | 12 | 70 | 0.84 | 3000 | 14.1 | 0.09 | 24.5 | 52.0 | 3 |
| EF60202B1-0000-A99 | ◐ | 24 | 60 | 1.44 | 4500 | 23.0 | 0.18 | 34.5 | 52.0 | 1 |
| EF60202B2-0000-A99 | ◐ | 24 | 38 | 0.92 | 3700 | 19.0 | 0.14 | 29.0 | 52.0 | 2 |
| EF60202B3-0000-A99 | ◐ | 24 | 23 | 0.56 | 3000 | 14.1 | 0.09 | 24.5 | 52.0 | 3 |

### Air Flow-Static Pressure Characteristics

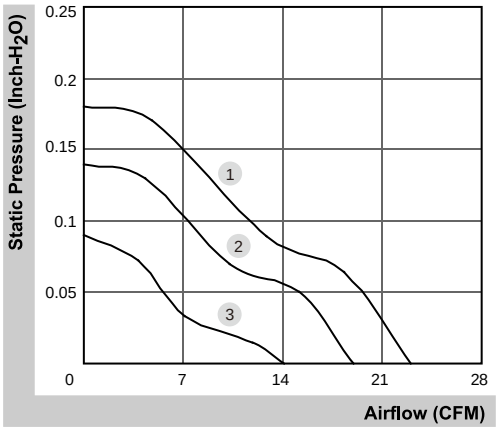


### External dimensions (mm)

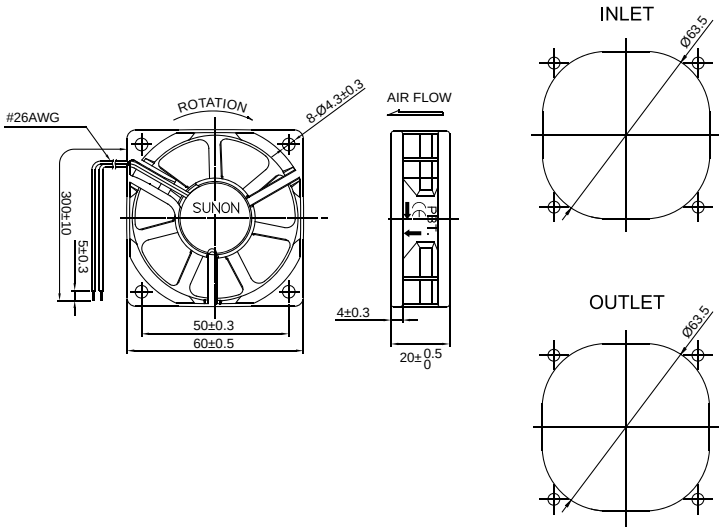


*All model could be customized. Please contact with Sunon Sales.
*Specifications are subject to change without notice. Please Visit SUNON website at www.sunon.com for update information.

# 60x60x25 mm

## 29.0~40.0 CFM

### Specifications

| Model | Bearing | Rating Voltage | Power Current | Power Consumption | Speed | Air Flow | Static Pressure | Noise | Weight | Curve |
|---|---|---|---|---|---|---|---|---|---|---|
| | ◐ 2BALL ○ Sleeve | (VDC) | (mA) | (WATTS) | (RPM) | (CFM) | (inch-$H_2O$) | (dB(A)) | (g) | |
| PE60251BX-0000-A99 | ◐ | 12 | 370 | 4.44 | 7600 | 40.0 | 0.64 | 46.0 | 71.0 | 1 |
| PE60251B1-0000-A99 | ◐ | 12 | 297 | 3.57 | 6900 | 36.0 | 0.54 | 44.0 | 71.0 | 2 |
| PE60251B2-0000-A99 | ◐ | 12 | 232 | 2.79 | 6100 | 31.5 | 0.42 | 42.0 | 71.0 | 3 |
| PE60251B3-0000-A99 | ◐ | 12 | 197 | 2.37 | 5600 | 29.0 | 0.36 | 38.0 | 71.0 | 4 |
| PE60252BX-0000-A99 | ◐ | 24 | 190 | 4.56 | 7600 | 40.0 | 0.64 | 46.0 | 75.0 | 1 |
| PE60252B1-0000-A99 | ◐ | 24 | 155 | 3.72 | 6900 | 36.0 | 0.54 | 44.0 | 75.0 | 2 |
| PE60252B2-0000-A99 | ◐ | 24 | 121 | 2.91 | 6100 | 31.5 | 0.42 | 42.0 | 75.0 | 3 |
| PE60252B3-0000-A99 | ◐ | 24 | 104 | 2.50 | 5600 | 29.0 | 0.36 | 38.0 | 75.0 | 4 |

### Air Flow-Static Pressure Characteristics

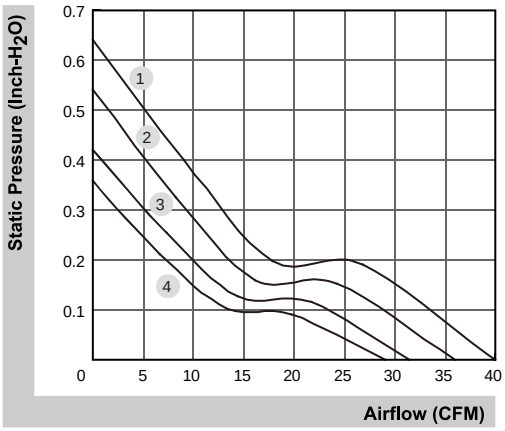


### External dimensions(mm)

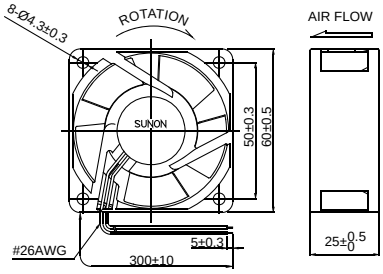


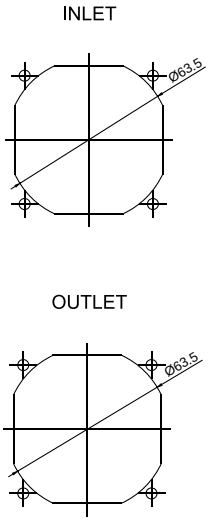


*All model could be customized. Please contact with Sunon Sales.
*Specifications are subject to change without notice. Please Visit SUNON website at www.sunon.com for update information.

# 60x60x25 mm

## 16.0~27.0 CFM

### Specifications

| MAGLev by SUNON | Bearing | Rating Voltage | Power Current | Power Consumption | Speed | Air Flow | Static Pressure | Noise | Weight | Curve |
|---|---|---|---|---|---|---|---|---|---|---|
| | ● VAPO | (VDC) | (mA) | (WATTS) | (RPM) | (CFM) | (inch-$H_2O$) | (dB(A)) | (g) | |
| MF60251VX-10000-A99 | ● | 12 | 130 | 1.56 | 5200 | 27.0 | 0.31 | 31.2 | 45.0 | 1 |
| MF60251V1-10000-A99 | ● | 12 | 75 | 0.90 | 4500 | 23.5 | 0.21 | 27.0 | 45.0 | 2 |
| MF60251V2-10000-A99 | ● | 12 | 72 | 0.87 | 3800 | 19.3 | 0.15 | 22.0 | 45.0 | 3 |
| MF60251V3-10000-A99 | ● | 12 | 44 | 0.53 | 3100 | 16.0 | 0.10 | 16.7 | 45.0 | 4 |
| MF60252VX-10000-A99 | ● | 24 | 80 | 1.92 | 5200 | 27.0 | 0.31 | 31.2 | 45.0 | 1 |
| MF60252V1-10000-A99 | ● | 24 | 50 | 1.20 | 4500 | 23.5 | 0.21 | 27.0 | 45.0 | 2 |
| MF60252V2-10000-A99 | ● | 24 | 30 | 0.72 | 3800 | 19.3 | 0.15 | 22.0 | 45.0 | 3 |
| MF60252V3-10000-A99 | ● | 24 | 22 | 0.53 | 3100 | 16.0 | 0.10 | 16.7 | 45.0 | 4 |

| Model | Bearing | Rating Voltage | Power Current | Power Consumption | Speed | Air Flow | Static Pressure | Noise | Weight | Curve |
|---|---|---|---|---|---|---|---|---|---|---|
| | ◐ 2BALL ○ Sleeve | (VDC) | (mA) | (WATTS) | (RPM) | (CFM) | (inch-$H_2O$) | (dB(A)) | (g) | |
| EE60251S1-10000-999 | ○ | 12 | 122 | 1.47 | 4500 | 23.5 | 0.21 | 27.0 | 45.0 | 2 |
| EE60251S2-10000-999 | ○ | 12 | 85 | 1.02 | 3800 | 19.3 | 0.15 | 22.0 | 45.0 | 3 |
| EE60251S3-10000-999 | ○ | 12 | 60 | 0.72 | 3100 | 16.0 | 0.10 | 16.7 | 45.0 | 4 |
| EF60252S1-10000-A99 | ○ | 24 | 50 | 1.20 | 4500 | 23.5 | 0.21 | 27.0 | 45.0 | 2 |

### Air Flow-Static Pressure Characteristics

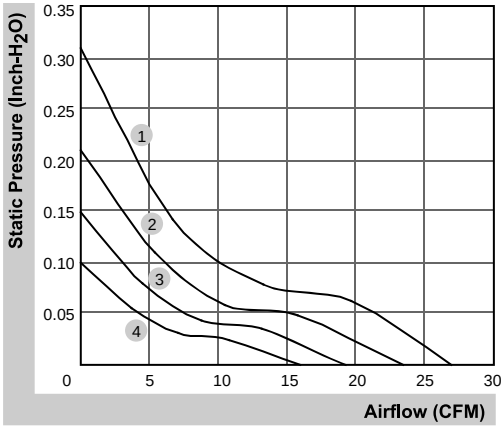


### External dimensions(mm)

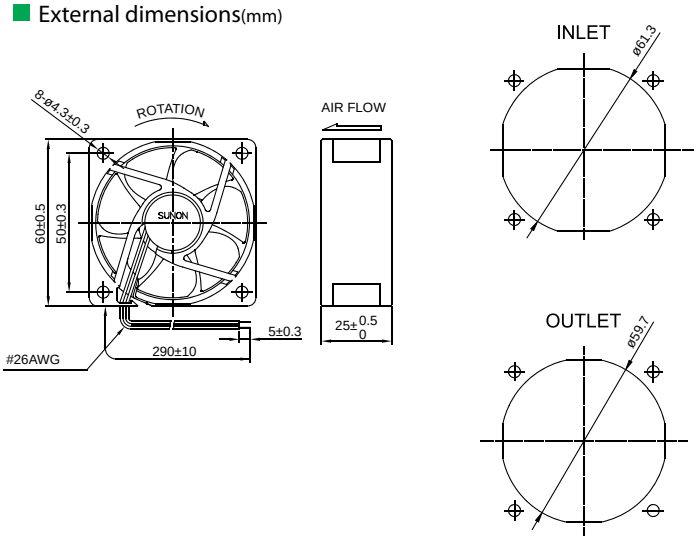


*All model could be customized. Please contact with Sunon Sales.
*Specifications are subject to change without notice. Please Visit SUNON website at www.sunon.com for update information.

# 60x60x25 mm

## 13.9~23.5 CFM

### Specifications

| Model | Bearing | Rating Voltage | Power Current | Power Consumption | Speed | Air Flow | Static Pressure | Noise | Weight | Curve |
|---|---|---|---|---|---|---|---|---|---|---|
| | ◐ 2BALL ○ Sleeve | (VDC) | (mA) | (WATTS) | (RPM) | (CFM) | (inch-$H_2O$) | (dB(A)) | (g) | |
| EE60251B1-0000-999 | ◐ | 12 | 120 | 1.44 | 4500 | 23.5 | 0.21 | 34.5 | 50.0 | 1 |
| EE60251B2-0000-999 | ◐ | 12 | 78 | 0.94 | 3800 | 19.3 | 0.15 | 30.0 | 50.0 | 2 |
| EE60251B3-0000-999 | ◐ | 12 | 58 | 0.70 | 3000 | 13.9 | 0.08 | 20.0 | 50.0 | 3 |
| EE60252B1-0000-A99 | ◐ | 24 | 70 | 1.68 | 4500 | 23.5 | 0.21 | 34.5 | 50.0 | 1 |
| EE60252B2-0000-A99 | ◐ | 24 | 47 | 1.13 | 3800 | 19.3 | 0.15 | 30.0 | 50.0 | 2 |
| EE60252B3-0000-A99 | ◐ | 24 | 30 | 0.72 | 3000 | 13.9 | 0.08 | 20.0 | 50.0 | 3 |

### Air Flow-Static Pressure Characteristics

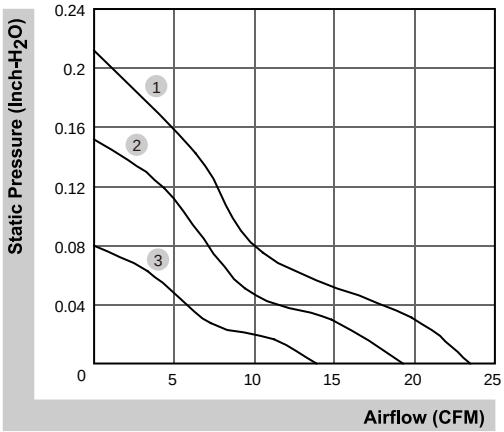


### External dimensions(mm)

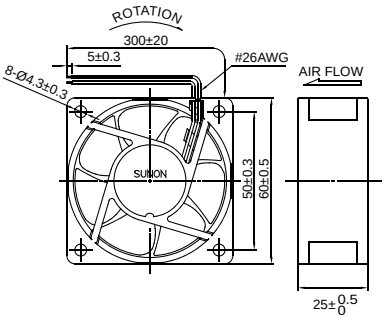


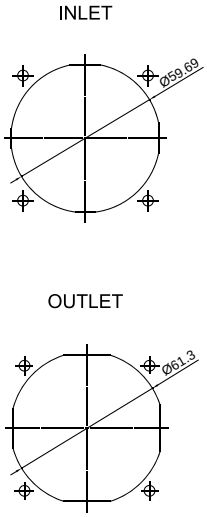


*All model could be customized. Please contact with Sunon Sales.
*Specifications are subject to change without notice. Please Visit SUNON website at www.sunon.com for update information.

# 60x60x25 mm

## 13.8 CFM

### Specifications

| MAGLev by SUNON | Bearing | Rating Voltage | Power Current | Power Consumption | Speed | Air Flow | Static Pressure | Noise | Weight | Curve |
|---|---|---|---|---|---|---|---|---|---|---|
| | ● VAPO | (VDC) | (mA) | (WATTS) | (RPM) | (CFM) | (inch-$H_2O$) | (dB(A)) | (g) | |
| HA60251V4-10000-A99 | ● | 12 | 20 | 0.24 | 2500 | 13.8 | 0.06 | 10.7 | 45.0 | 1 |

### Air Flow-Static Pressure Characteristics

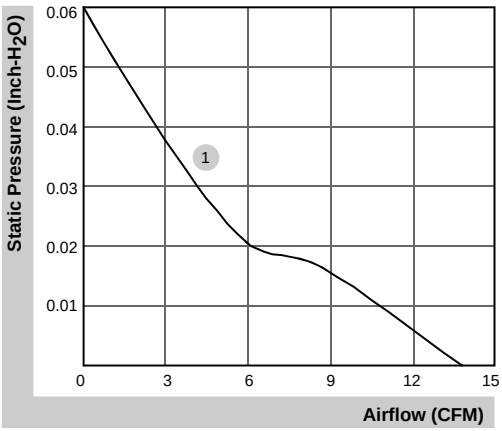


### External dimensions(mm)

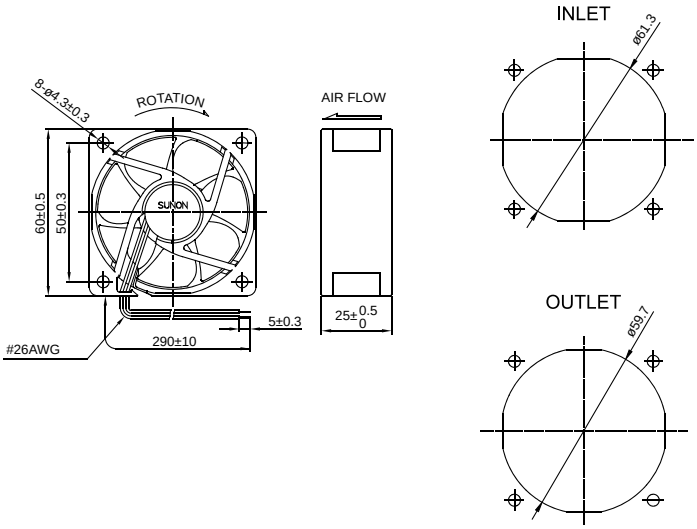


*All model could be customized. Please contact with Sunon Sales.
*Specifications are subject to change without notice. Please Visit SUNON website at www.sunon.com for update information.

# 60x60x38 mm

## 41.5~56.5 CFM

### Specifications

| Model | Bearing | Rating Voltage | Power Current | Power Consumption | Speed | Air Flow | Static Pressure | Noise | Weight | Curve |
|---|---|---|---|---|---|---|---|---|---|---|
| | ◐ 2BALL ○ Sleeve | (VDC) | (mA) | (WATTS) | (RPM) | (CFM) | (inch-$H_2O$) | (dB(A)) | (g) | |
| PMD2406PMB1-A (2).GN | ◐ | 24 | 430 | 10.3 | 8000 | 56.5 | 0.92 | 56.0 | 90.0 | 1 |
| PMD2406PMB2-A (2).GN | ◐ | 24 | 310 | 7.4 | 7000 | 49.2 | 0.71 | 52.0 | 90.0 | 2 |
| PMD2406PMB3-A (2).GN | ◐ | 24 | 220 | 5.3 | 6000 | 41.5 | 0.53 | 47.0 | 90.0 | 3 |

### Air Flow-Static Pressure Characteristics

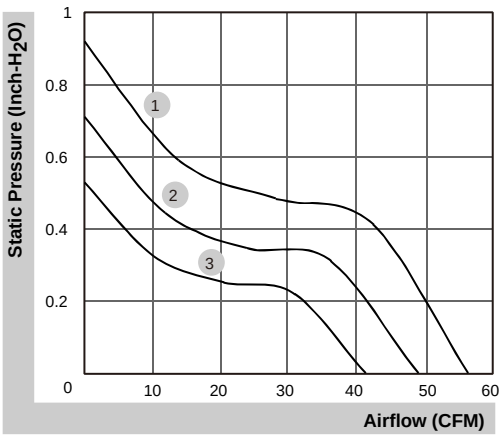


### External dimensions(mm)

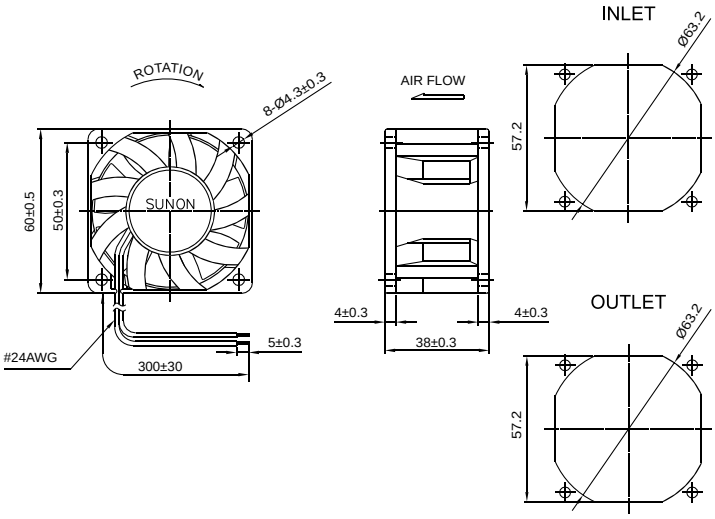


*All model could be customized. Please contact with Sunon Sales.
*Specifications are subject to change without notice. Please Visit SUNON website at www.sunon.com for update information.

# 70x70x15 mm

## 19.0~27.0 CFM

### Specifications

| MAGLev by SUNON | Bearing | Rating Voltage | Power Current | Power Consumption | Speed | Air Flow | Static Pressure | Noise | Weight | Curve |
|---|---|---|---|---|---|---|---|---|---|---|
| | ● VAPO | (VDC) | (mA) | (WATTS) | (RPM) | (CFM) | (inch-$H_2O$) | (dB(A)) | (g) | |
| ME70151V1-0000-A99 | ● | 12 | 113 | 1.36 | 3300 | 27.0 | 0.11 | 31.5 | 41.0 | 1 |
| ME70151V2-0000-A99 | ● | 12 | 74 | 0.89 | 2800 | 23.0 | 0.09 | 26.5 | 41.0 | 2 |
| ME70151V3-0000-A99 | ● | 12 | 47 | 0.57 | 2300 | 19.0 | 0.07 | 21.5 | 41.0 | 3 |

### Air Flow-Static Pressure Characteristics

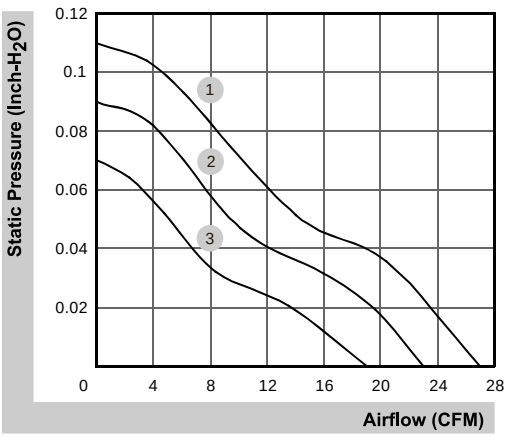


### External dimensions(mm)

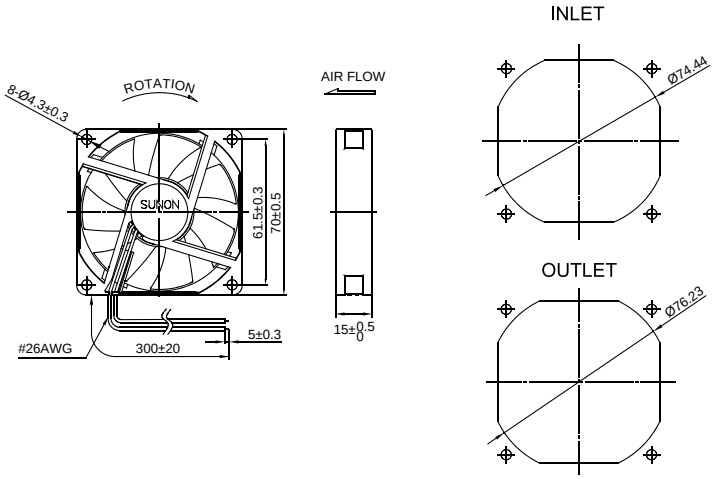


*All model could be customized. Please contact with Sunon Sales.
*Specifications are subject to change without notice. Please Visit SUNON website at www.sunon.com for update information.

# 70x70x20 mm

## 37.0~43.0 CFM

### Specifications

| MAGLev by SUNON | Bearing | Rating Voltage | Power Current | Power Consumption | Speed | Air Flow | Static Pressure | Noise | Weight | Curve |
|---|---|---|---|---|---|---|---|---|---|---|
| | ● VAPO | (VDC) | (mA) | (WATTS) | (RPM) | (CFM) | (inch-$H_2O$) | (dB(A)) | (g) | |
| PF70201V1-0000-A99 | ● | 12 | 285 | 3.42 | 4600 | 43.0 | 0.28 | 41.5 | 80.0 | 1 |
| PF70201V2-0000-A99 | ● | 12 | 230 | 2.76 | 4300 | 40.0 | 0.24 | 40.0 | 80.0 | 2 |
| PF70201V3-0000-A99 | ● | 12 | 195 | 2.34 | 4000 | 37.0 | 0.21 | 37.5 | 80.0 | 3 |

### Air Flow-Static Pressure Characteristics

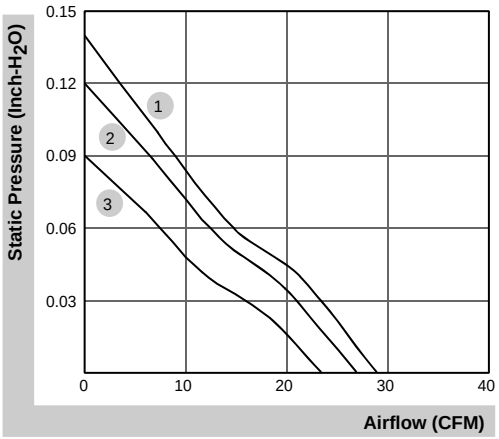


### External dimensions(mm)

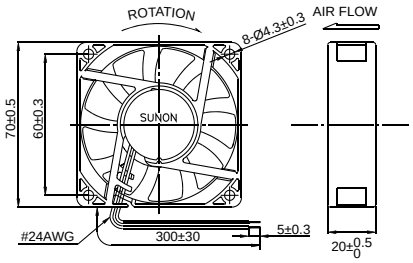


INLET

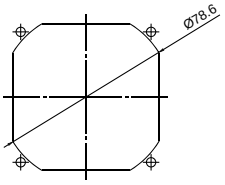


OUTLET

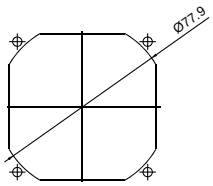


*All model could be customized. Please contact with Sunon Sales.
*Specifications are subject to change without notice. Please Visit SUNON website at www.sunon.com for update information.

# 70x70x20 mm

## 23.5~29.0 CFM

### Specifications

| MAGLev by SUNON | Bearing | Rating Voltage | Power Current | Power Consumption | Speed | Air Flow | Static Pressure | Noise | Weight | Curve |
|---|---|---|---|---|---|---|---|---|---|---|
| | ● VAPO | (VDC) | (mA) | (WATTS) | (RPM) | (CFM) | (inch-$H_2O$) | (dB(A)) | (g) | |
| ME70201V1-0000-A99 | ● | 12 | 130 | 1.56 | 3200 | 29.0 | 0.14 | 33.0 | 60.0 | 1 |
| ME70201V2-0000-A99 | ● | 12 | 99 | 1.19 | 2900 | 27.0 | 0.12 | 30.0 | 60.0 | 2 |
| ME70201V3-0000-A99 | ● | 12 | 77 | 0.93 | 2600 | 23.5 | 0.09 | 26.0 | 60.0 | 3 |
| ME70202V1-0000-A99 | ● | 24 | 66 | 1.59 | 3200 | 29.0 | 0.14 | 33.0 | 60.0 | 1 |
| ME70202V2-0000-A99 | ● | 24 | 55 | 1.32 | 2900 | 27.0 | 0.12 | 30.0 | 60.0 | 2 |
| ME70202V3-0000-A99 | ● | 24 | 44 | 1.06 | 2600 | 23.5 | 0.09 | 26.0 | 60.0 | 3 |

### Air Flow-Static Pressure Characteristics

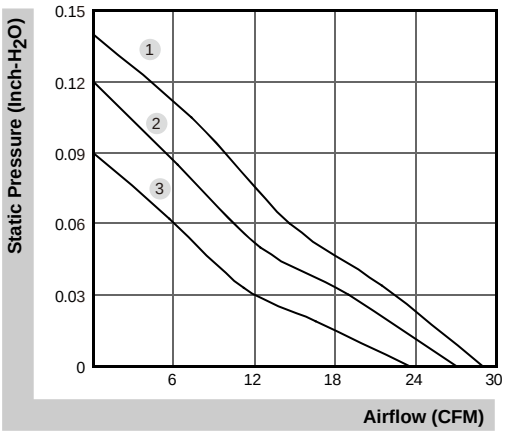


### External dimensions(mm)

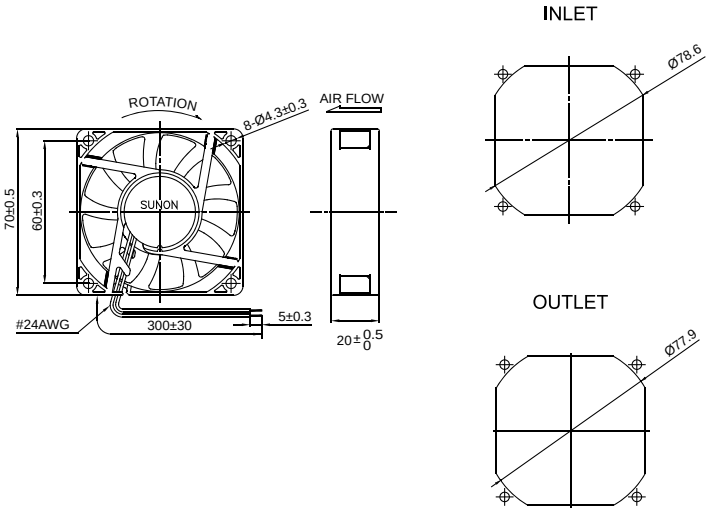


*All model could be customized. Please contact with Sunon Sales.
*Specifications are subject to change without notice. Please Visit SUNON website at www.sunon.com for update information.

# 70x70x25 mm

## 40.0~49.0 CFM

### Specifications

| MAGLev by SUNON | Bearing | Rating Voltage | Power Current | Power Consumption | Speed | Air Flow | Static Pressure | Noise | Weight | Curve |
|---|---|---|---|---|---|---|---|---|---|---|
| | ● VAPO | (VDC) | (mA) | (WATTS) | (RPM) | (CFM) | (inch-$H_2O$) | (dB(A)) | (g) | |
| PMD2407PTV1-A GN | ● | 24 | 200 | 4.8 | 5100 | 49.0 | 0.36 | 44.0 | 90.0 | 1 |
| PMD2407PTV2-A GN | ● | 24 | 160 | 3.8 | 4700 | 45.0 | 0.31 | 42.0 | 90.0 | 2 |
| PMD2407PTV3-A GN | ● | 24 | 130 | 3.1 | 4200 | 40.0 | 0.25 | 38.0 | 90.0 | 3 |

### Air Flow-Static Pressure Characteristics

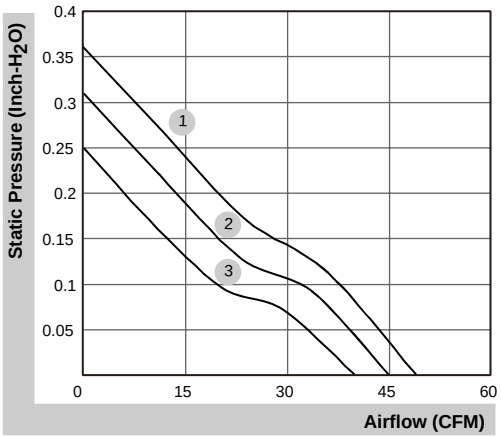


### External dimensions(mm)

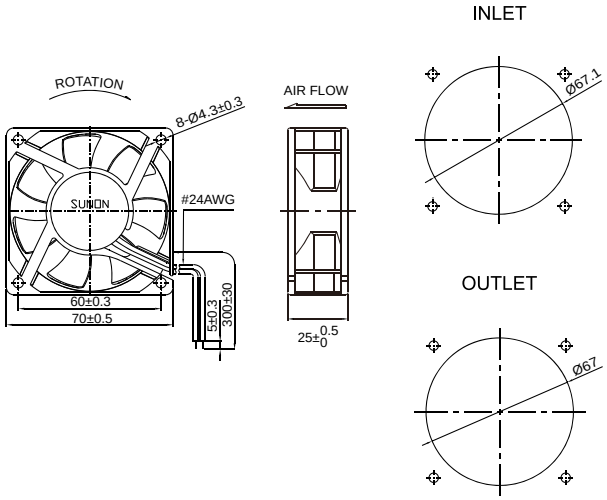


*All model could be customized. Please contact with Sunon Sales.
*Specifications are subject to change without notice. Please Visit SUNON website at www.sunon.com for update information.

# 80x80x15 mm

## 30.0~37.0 CFM

### Specifications

| MAGLev by SUNON | Bearing | Rating Voltage | Power Current | Power Consumption | Speed | Air Flow | Static Pressure | Noise | Weight | Curve |
|---|---|---|---|---|---|---|---|---|---|---|
| | ● VAPO | (VDC) | (mA) | (WATTS) | (RPM) | (CFM) | (inch-$H_2O$) | (dB(A)) | (g) | |
| ME80151V1-0000-A99 | ● | 12 | 163 | 1.96 | 3000 | 37.0 | 0.14 | 34.7 | 68.0 | 1 |
| ME80151V2-0000-A99 | ● | 12 | 129 | 1.55 | 2700 | 33.6 | 0.11 | 32.0 | 68.0 | 2 |
| ME80151V3-0000-A99 | ● | 12 | 90 | 1.08 | 2400 | 30.0 | 0.09 | 30.8 | 68.0 | 3 |
| ME80152V1-0000-A99 | ● | 24 | 92 | 2.21 | 3000 | 37.0 | 0.14 | 34.7 | 68.0 | 1 |
| ME80152V2-0000-A99 | ● | 24 | 65 | 1.56 | 2700 | 33.6 | 0.11 | 32.0 | 68.0 | 2 |
| ME80152V3-0000-A99 | ● | 24 | 56 | 1.35 | 2400 | 30.0 | 0.09 | 30.8 | 68.0 | 3 |

| Model | Bearing | Rating Voltage | Power Current | Power Consumption | Speed | Air Flow | Static Pressure | Noise | Weight | Curve |
|---|---|---|---|---|---|---|---|---|---|---|
| | ◐ 2BALL ○ Sleeve | (VDC) | (mA) | (WATTS) | (RPM) | (CFM) | (inch-$H_2O$) | (dB(A)) | (g) | |
| EE80151S1-0000-A99 | ○ | 12 | 163 | 1.96 | 3000 | 37.0 | 0.14 | 34.7 | 68.0 | 1 |
| EE80151S2-0000-999 | ○ | 12 | 134 | 1.61 | 2700 | 33.6 | 0.11 | 32.0 | 68.0 | 2 |
| EE80151S3-0000-999 | ○ | 12 | 100 | 1.20 | 2400 | 30.0 | 0.09 | 30.8 | 68.0 | 3 |

### Air Flow-Static Pressure Characteristics

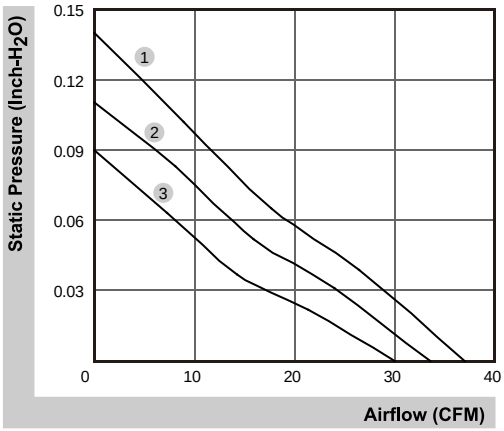


### External dimensions(mm)

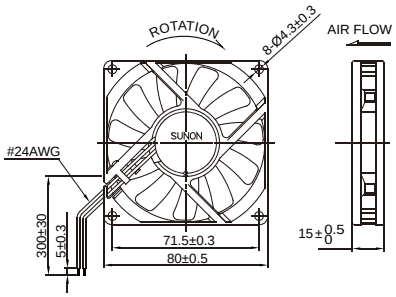


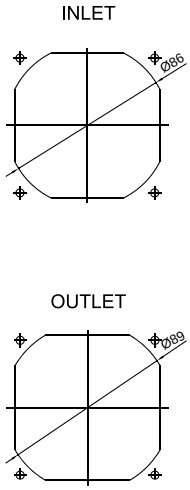


*All model could be customized. Please contact with Sunon Sales.
*Specifications are subject to change without notice. Please Visit SUNON website at www.sunon.com for update information.

# 80x80x20 mm

## 29.0~36.0 CFM

### Specifications

| MAGLev by SUNON | Bearing | Rating Voltage | Power Current | Power Consumption | Speed | Air Flow | Static Pressure | Noise | Weight | Curve |
|---|---|---|---|---|---|---|---|---|---|---|
| | ● VAPO | (VDC) | (mA) | (WATTS) | (RPM) | (CFM) | (inch-$H_2O$) | (dB(A)) | (g) | |
| ME80201V1-0000-A99 | ● | 12 | 130 | 1.56 | 3300 | 36.0 | 0.18 | 38.0 | 66.0 | 1 |
| ME80201V2-0000-A99 | ● | 12 | 95 | 1.14 | 3000 | 33.0 | 0.16 | 35.0 | 66.0 | 2 |
| ME80201V3-0000-A99 | ● | 12 | 74 | 0.89 | 2600 | 29.0 | 0.12 | 30.0 | 66.0 | 3 |
| ME80202V1-0000-A99 | ● | 24 | 64 | 1.54 | 3300 | 36.0 | 0.18 | 38.0 | 66.0 | 1 |
| ME80202V2-0000-A99 | ● | 24 | 51 | 1.23 | 3000 | 33.0 | 0.16 | 35.0 | 66.0 | 2 |
| ME80202V3-0000-A99 | ● | 24 | 42 | 1.01 | 2600 | 29.0 | 0.12 | 30.0 | 66.0 | 3 |

### Air Flow-Static Pressure Characteristics

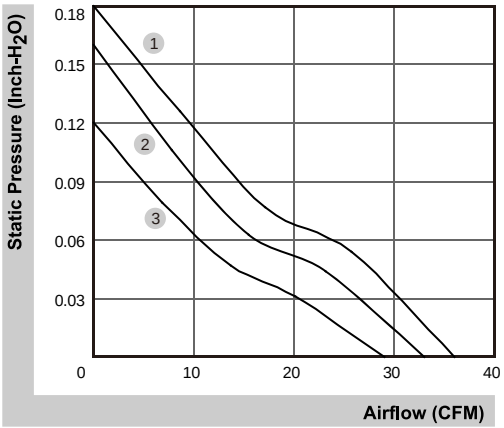


### External dimensions(mm)

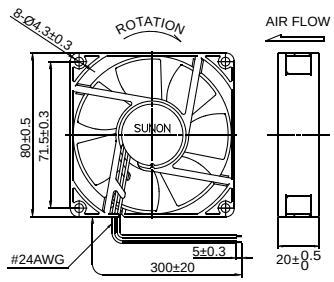


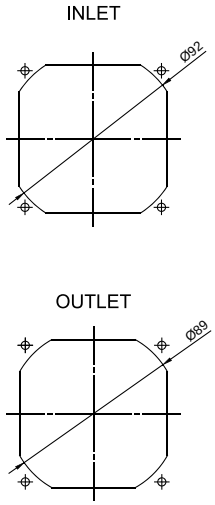


*All model could be customized. Please contact with Sunon Sales.
*Specifications are subject to change without notice. Please Visit SUNON website at www.sunon.com for update information.

# 80x80x25 mm

## 53.0~60.0 CFM

### Specifications

| MAGLev by SUNON | Bearing | Rating Voltage | Power Current | Power Consumption | Speed | Air Flow | Static Pressure | Noise | Weight | Curve |
|---|---|---|---|---|---|---|---|---|---|---|
| | ● VAPO | (VDC) | (mA) | (WATTS) | (RPM) | (CFM) | (inch-$H_2O$) | (dB(A)) | (g) | |
| PF80251V1-10000-A99 | ● | 12 | 310 | 3.72 | 4800 | 60.0 | 0.41 | 44.7 | 91.0 | 1 |
| PF80251V2-10000-A99 | ● | 12 | 240 | 2.88 | 4500 | 57.0 | 0.35 | 43.1 | 91.0 | 2 |
| PF80251V3-10000-A99 | ● | 12 | 200 | 2.40 | 4200 | 53.0 | 0.30 | 41.5 | 91.0 | 3 |
| PF80252V1-10000-A99 | ● | 24 | 180 | 4.32 | 4800 | 60.0 | 0.41 | 44.7 | 91.0 | 1 |
| PF80252V2-10000-A99 | ● | 24 | 126 | 3.03 | 4500 | 57.0 | 0.35 | 43.1 | 91.0 | 2 |
| PF80252V3-10000-A99 | ● | 24 | 110 | 2.64 | 4200 | 53.0 | 0.30 | 41.5 | 91.0 | 3 |

### Air Flow-Static Pressure Characteristics

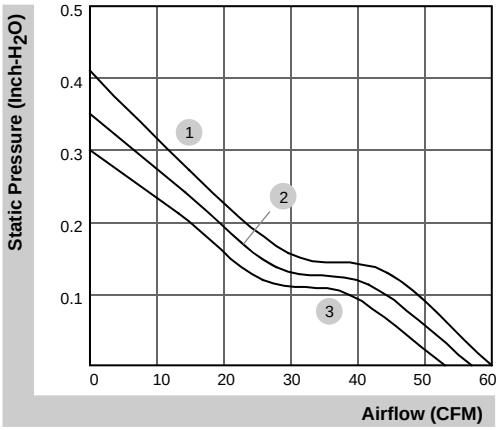


### External dimensions(mm)

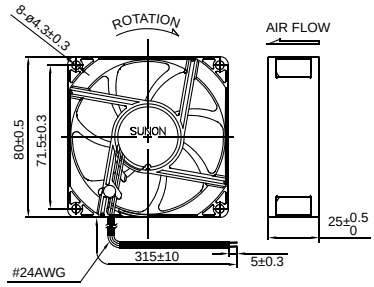


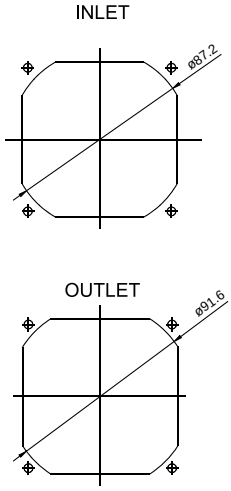


*All model could be customized. Please contact with Sunon Sales.
*Specifications are subject to change without notice. Please Visit SUNON website at www.sunon.com for update information.

# 80x80x25 mm

## 53.0~60.0 CFM

### Specifications

| Model | Bearing | Rating Voltage | Power Current | Power Consumption | Speed | Air Flow | Static Pressure | Noise | Weight | Curve |
|---|---|---|---|---|---|---|---|---|---|---|
| | ◐ 2BALL ○ Sleeve | (VDC) | (mA) | (WATTS) | (RPM) | (CFM) | (inch-$H_2O$) | (dB(A)) | (g) | |
| PF80251B1-0000-A99 | ◐ | 12 | 341 | 4.10 | 4800 | 60.0 | 0.41 | 47.5 | 91.0 | 1 |
| PF80251B2-0000-A99 | ◐ | 12 | 285 | 3.40 | 4500 | 57.0 | 0.35 | 46.0 | 91.0 | 2 |
| PF80251B3-0000-A99 | ◐ | 12 | 223 | 2.70 | 4200 | 53.0 | 0.30 | 44.5 | 91.0 | 3 |
| PE80252B1-0000-A99 | ◐ | 24 | 200 | 4.80 | 4800 | 60.0 | 0.41 | 47.5 | 91.0 | 1 |
| PE80252B2-0000-A99 | ◐ | 24 | 166 | 3.99 | 4500 | 57.0 | 0.35 | 46.0 | 91.0 | 2 |
| PE80252B3-0000-A99 | ◐ | 24 | 137 | 3.29 | 4200 | 53.0 | 0.30 | 44.5 | 91.0 | 3 |

### Air Flow-Static Pressure Characteristics

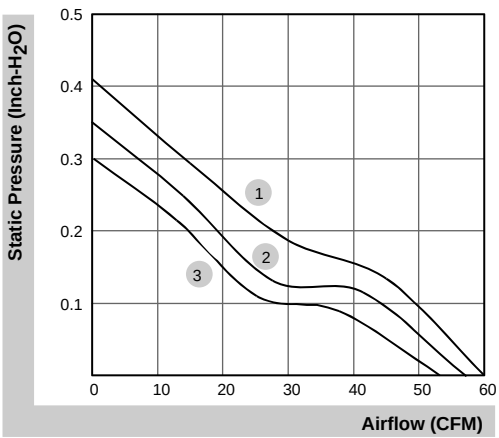


### External dimensions(mm)

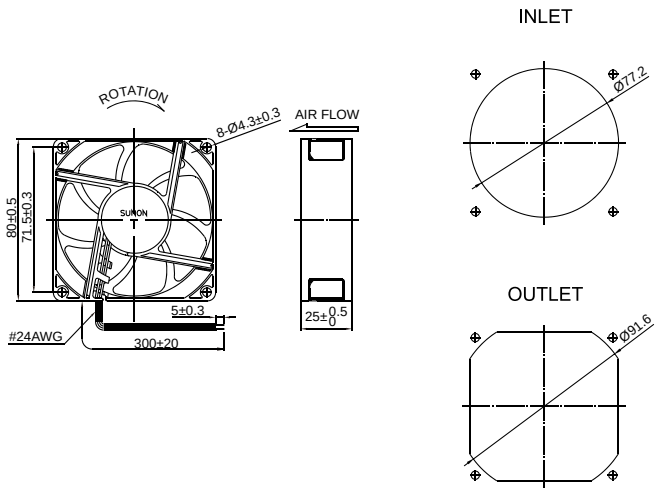


*All model could be customized. Please contact with Sunon Sales.
*Specifications are subject to change without notice. Please Visit SUNON website at www.sunon.com for update information.

# 80x80x25 mm

## 33.0~41.0 CFM

### Specifications

| MAGLev by SUNON | Bearing | Rating Voltage | Power Current | Power Consumption | Speed | Air Flow | Static Pressure | Noise | Weight | Curve |
|---|---|---|---|---|---|---|---|---|---|---|
| | ● VAPO | (VDC) | (mA) | (WATTS) | (RPM) | (CFM) | (inch-$H_2O$) | (dB(A)) | (g) | |
| MF80251V1-10000-A99 | ● | 12 | 120 | 1.44 | 3200 | 41.0 | 0.18 | 33.0 | 75.0 | 1 |
| MF80251V2-10000-A99 | ● | 12 | 92 | 1.11 | 2900 | 37.0 | 0.15 | 30.0 | 75.0 | 2 |
| MF80251V3-10000-A99 | ● | 12 | 65 | 0.78 | 2600 | 33.0 | 0.11 | 28.0 | 75.0 | 3 |
| MF80252V1-10000-A99 | ● | 24 | 65 | 1.56 | 3200 | 41.0 | 0.18 | 33.0 | 75.0 | 1 |
| MF80252V2-10000-A99 | ● | 24 | 50 | 1.20 | 2900 | 37.0 | 0.15 | 30.0 | 75.0 | 2 |
| MF80252V3-10000-A99 | ● | 24 | 40 | 0.96 | 2600 | 33.0 | 0.11 | 28.0 | 75.0 | 3 |

| Model | Bearing | Rating Voltage | Power Current | Power Consumption | Speed | Air Flow | Static Pressure | Noise | Weight | Curve |
|---|---|---|---|---|---|---|---|---|---|---|
| | ◐ 2BALL ○ Sleeve | (VDC) | (mA) | (WATTS) | (RPM) | (CFM) | (inch-$H_2O$) | (dB(A)) | (g) | |
| EF80251S1-10000-A99 | ○ | 12 | 120 | 1.44 | 3200 | 41.0 | 0.18 | 33.0 | 75.0 | 1 |
| EF80251S2-10000-A99 | ○ | 12 | 95 | 1.14 | 2900 | 37.0 | 0.15 | 30.0 | 75.0 | 2 |
| EF80251S3-10000-A99 | ○ | 12 | 70 | 0.84 | 2600 | 33.0 | 0.11 | 28.0 | 75.0 | 3 |
| EF80252S1-10000-A99 | ○ | 24 | 55 | 1.32 | 3200 | 41.0 | 0.18 | 33.0 | 75.0 | 1 |
| EF80252S2-10000-A99 | ○ | 24 | 42 | 1.01 | 2900 | 37.0 | 0.15 | 30.0 | 75.0 | 2 |

### Air Flow-Static Pressure Characteristics

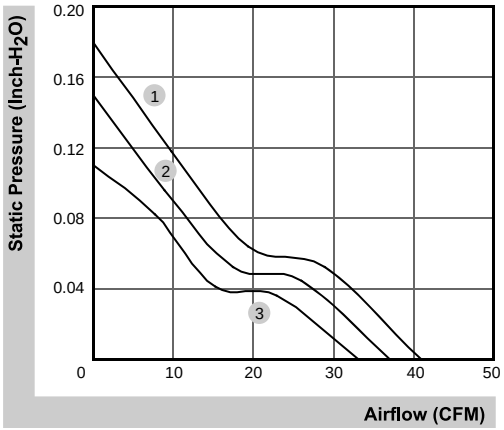


### External dimensions(mm)

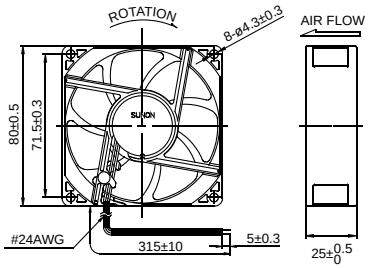


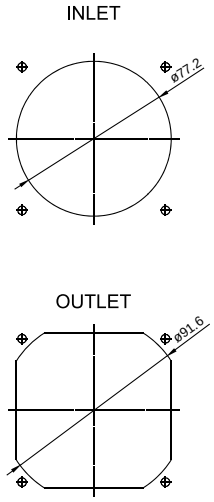


*All model could be customized. Please contact with Sunon Sales.
*Specifications are subject to change without notice. Please Visit SUNON website at www.sunon.com for update information.

# 80x80x25 mm

## 33.0~45.0 CFM

### Specifications

| Model | Bearing | Rating Voltage | Power Current | Power Consumption | Speed | Air Flow | Static Pressure | Noise | Weight | Curve |
|---|---|---|---|---|---|---|---|---|---|---|
| | ◐ 2BALL ○ Sleeve | (VDC) | (mA) | (WATTS) | (RPM) | (CFM) | (inch-$H_2O$) | (dB(A)) | (g) | |
| EE80251BX-0000-A99 | ◐ | 12 | 150 | 1.80 | 3600 | 45.0 | 0.23 | 38.0 | 89.0 | 1 |
| EE80251B1-0000-A99 | ◐ | 12 | 145 | 1.70 | 3200 | 41.0 | 0.18 | 33.0 | 75.0 | 2 |
| EE80251B2-0000-999 | ◐ | 12 | 120 | 1.40 | 2900 | 37.0 | 0.15 | 30.0 | 75.0 | 3 |
| EE80251B3-0000-999 | ◐ | 12 | 90 | 1.10 | 2600 | 33.0 | 0.11 | 28.0 | 75.0 | 4 |
| EE80252BX-0000-A99 | ◐ | 24 | 80 | 1.90 | 3600 | 45.0 | 0.23 | 38.0 | 89.0 | 1 |
| EE80252B1-0000-A99 | ◐ | 24 | 73 | 1.80 | 3200 | 41.0 | 0.18 | 33.0 | 75.0 | 2 |
| EE80252B2-0000-999 | ◐ | 24 | 64 | 1.50 | 2900 | 37.0 | 0.15 | 30.0 | 75.0 | 3 |
| EE80252B3-0000-999 | ◐ | 24 | 50 | 1.20 | 2600 | 33.0 | 0.11 | 28.0 | 75.0 | 4 |

### Air Flow-Static Pressure Characteristics

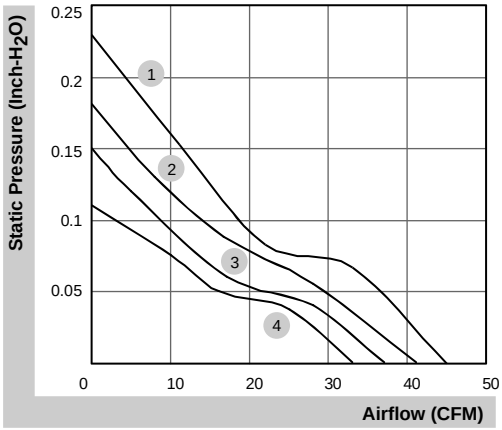


### External dimensions(mm)

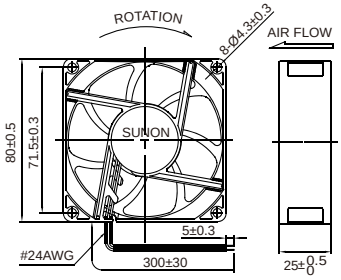


INLET

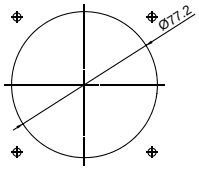


OUTLET

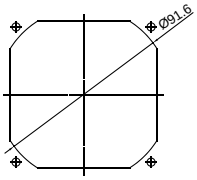


*All model could be customized. Please contact with Sunon Sales.
*Specifications are subject to change without notice. Please Visit SUNON website at www.sunon.com for update information.

# 80x80x25 mm

## 23.9 CFM

### Specifications

| MAGLev by SUNON | Bearing | Rating Voltage | Power Current | Power Consumption | Speed | Air Flow | Static Pressure | Noise | Weight | Curve |
|---|---|---|---|---|---|---|---|---|---|---|
| | ● VAPO | (VDC) | (mA) | (WATTS) | (RPM) | (CFM) | (inch-$H_2O$) | (dB(A)) | (g) | |
| HA80251V4-10000-A99 | ● | 12 | 40 | 0.48 | 2000 | 23.9 | 0.07 | 20.4 | 75.0 | 1 |

### Air Flow-Static Pressure Characteristics

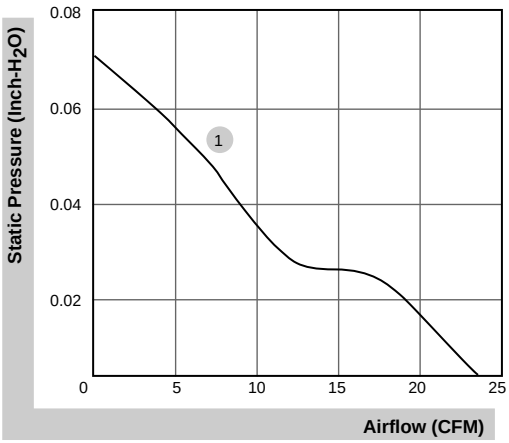


### External dimensions(mm)

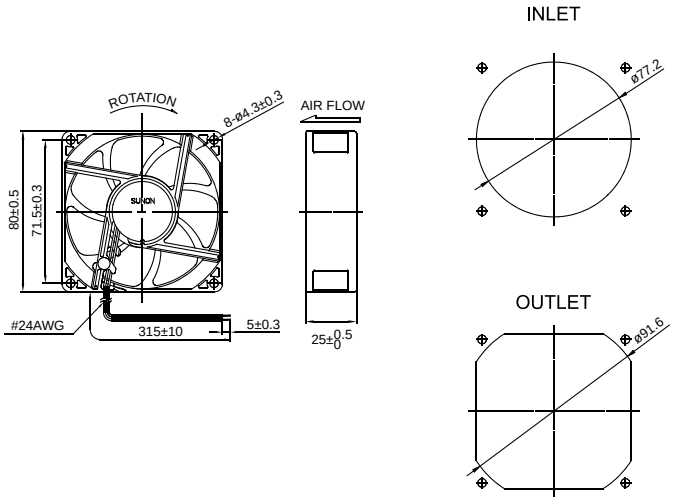


*All model could be customized. Please contact with Sunon Sales.
*Specifications are subject to change without notice. Please Visit SUNON website at www.sunon.com for update information.

# 80x80x25 mm (IP56)

## 33.0~60.0 CFM

### Specifications

| Model | Bearing | Rating Voltage | Power Current | Power Consumption | Speed | Air Flow | Static Pressure | Noise | Weight | Curve |
|---|---|---|---|---|---|---|---|---|---|---|
| | ◐ 2BALL ○ Sleeve | (VDC) | (mA) | (WATTS) | (RPM) | (CFM) | (inch-$H_2O$) | (dB(A)) | (g) | |
| GF80251B1-0000-AC9 | ◐ | 12 | 330 | 3.96 | 4800 | 60.0 | 0.41 | 47.5 | 105.0 | 1 |
| GF80251B2-0000-AC9 | ◐ | 12 | 255 | 3.06 | 4500 | 57.0 | 0.35 | 46.0 | 105.0 | 2 |
| GF80251B3-0000-AC9 | ◐ | 12 | 200 | 2.40 | 4200 | 53.0 | 0.30 | 44.5 | 105.0 | 3 |
| GF80251B5-0000-AC9 | ◐ | 12 | 145 | 1.74 | 3200 | 41.0 | 0.18 | 33.0 | 87.0 | 4 |
| GF80251B6-0000-AC9 | ◐ | 12 | 120 | 1.44 | 2900 | 37.0 | 0.15 | 30.0 | 87.0 | 5 |
| GF80251B7-0000-AC9 | ◐ | 12 | 84 | 1.01 | 2600 | 33.0 | 0.11 | 28.0 | 87.0 | 6 |
| GE80252B1-0000-AC9 | ◐ | 24 | 200 | 4.80 | 4800 | 60.0 | 0.41 | 47.5 | 105.0 | 1 |
| GE80252B2-0000-AC9 | ◐ | 24 | 166 | 3.99 | 4500 | 57.0 | 0.35 | 46.0 | 105.0 | 2 |
| GE80252B3-0000-AC9 | ◐ | 24 | 137 | 3.29 | 4200 | 53.0 | 0.30 | 44.5 | 105.0 | 3 |
| GF80252B5-0000-AC9 | ◐ | 24 | 73 | 1.76 | 3200 | 41.0 | 0.18 | 33.0 | 87.0 | 4 |
| GF80252B6-0000-AC9 | ◐ | 24 | 59 | 1.42 | 2900 | 37.0 | 0.15 | 30.0 | 87.0 | 5 |
| GF80252B7-0000-AC9 | ◐ | 24 | 45 | 1.08 | 2600 | 33.0 | 0.11 | 28.0 | 87.0 | 6 |
| GE80254B1-0000-AC9 | ◐ | 48 | 114 | 5.48 | 4800 | 60.0 | 0.41 | 47.5 | 105.0 | 1 |
| GE80254B2-0000-AC9 | ◐ | 48 | 95 | 4.56 | 4500 | 57.0 | 0.35 | 46.0 | 105.0 | 2 |
| GE80254B3-0000-AC9 | ◐ | 48 | 75 | 3.60 | 4200 | 53.0 | 0.30 | 44.5 | 105.0 | 3 |

### Air Flow-Static Pressure Characteristics

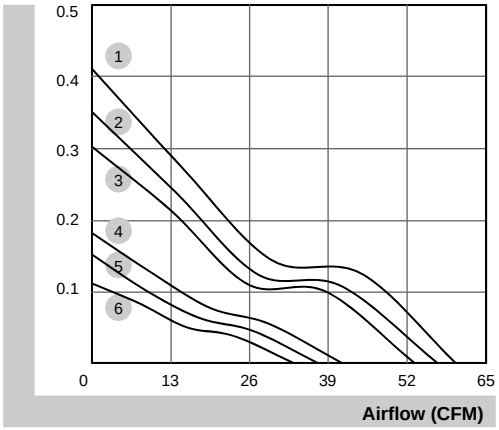


### External dimensions(mm)

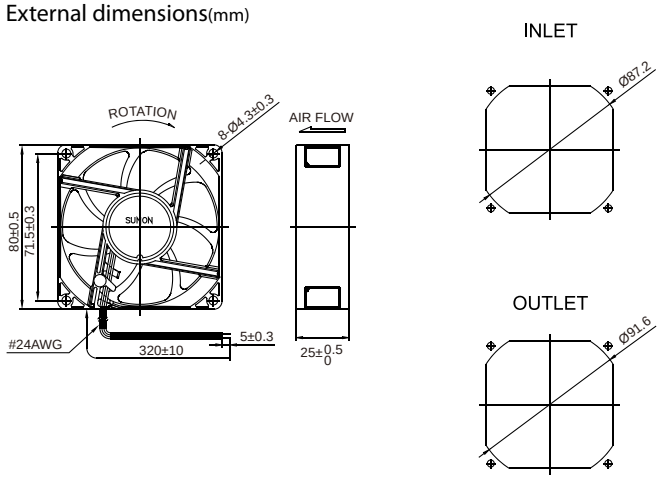


*All model could be customized. Please contact with Sunon Sales.
*Specifications are subject to change without notice. Please Visit SUNON website at www.sunon.com for update information.

# 80x80x25 mm (IP68)

## 33.0~60.0 CFM

### Specifications

| Model | Bearing | Rating Voltage | Power Current | Power Consumption | Speed | Air Flow | Static Pressure | Noise | Weight | Curve |
|---|---|---|---|---|---|---|---|---|---|---|
| | ◐ 2BALL ○ Sleeve | (VDC) | (mA) | (WATTS) | (RPM) | (CFM) | (inch-$H_2O$) | (dB(A)) | (g) | |
| GF80251B1-0000-AE9 | ◐ | 12 | 330 | 3.96 | 4800 | 60.0 | 0.41 | 47.5 | 105.0 | 1 |
| GF80251B2-0000-AE9 | ◐ | 12 | 255 | 3.06 | 4500 | 57.0 | 0.35 | 46.0 | 105.0 | 2 |
| GF80251B3-0000-AE9 | ◐ | 12 | 200 | 2.40 | 4200 | 53.0 | 0.30 | 44.5 | 105.0 | 3 |
| GF80251B5-0000-AE9 | ◐ | 12 | 145 | 1.74 | 3200 | 41.0 | 0.18 | 33.0 | 87.0 | 4 |
| GF80251B6-0000-AE9 | ◐ | 12 | 120 | 1.44 | 2900 | 37.0 | 0.15 | 30.0 | 87.0 | 5 |
| GF80251B7-0000-AE9 | ◐ | 12 | 84 | 1.01 | 2600 | 33.0 | 0.11 | 28.0 | 87.0 | 6 |
| GE80252B1-0000-AE9 | ◐ | 24 | 200 | 4.80 | 4800 | 60.0 | 0.41 | 47.5 | 105.0 | 1 |
| GE80252B2-0000-AE9 | ◐ | 24 | 166 | 3.99 | 4500 | 57.0 | 0.35 | 46.0 | 105.0 | 2 |
| GE80252B3-0000-AE9 | ◐ | 24 | 137 | 3.29 | 4200 | 53.0 | 0.30 | 44.5 | 105.0 | 3 |
| GF80252B5-0000-AE9 | ◐ | 24 | 73 | 1.76 | 3200 | 41.0 | 0.18 | 33.0 | 87.0 | 4 |
| GF80252B6-0000-AE9 | ◐ | 24 | 59 | 1.42 | 2900 | 37.0 | 0.15 | 30.0 | 87.0 | 5 |
| GF80252B7-0000-AE9 | ◐ | 24 | 45 | 1.08 | 2600 | 33.0 | 0.11 | 28.0 | 87.0 | 6 |
| GE80254B1-0000-AE9 | ◐ | 48 | 114 | 5.48 | 4800 | 60.0 | 0.41 | 47.5 | 105.0 | 1 |
| GE80254B2-0000-AE9 | ◐ | 48 | 95 | 4.56 | 4500 | 57.0 | 0.35 | 46.0 | 105.0 | 2 |
| GE80254B3-0000-AE9 | ◐ | 48 | 75 | 3.60 | 4200 | 53.0 | 0.30 | 44.5 | 105.0 | 3 |

### Air Flow-Static Pressure Characteristics

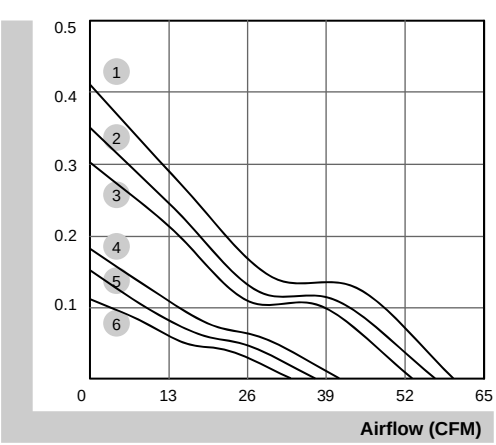


### External dimensions(mm)

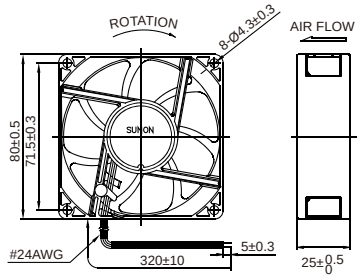


INLET

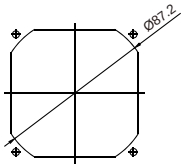


OUTLET

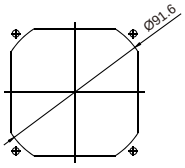


*All model could be customized. Please contact with Sunon Sales.
*Specifications are subject to change without notice. Please Visit SUNON website at www.sunon.com for update information.

# 80x80x25 mm (GR487)

## 33.0~41.0 CFM

### Specifications

| Model | Bearing | Rating Voltage | Power Current | Power Consumption | Speed | Air Flow | Static Pressure | Noise | Weight | Curve |
|---|---|---|---|---|---|---|---|---|---|---|
| | ◐ 2BALL ○ Sleeve | (VDC) | (mA) | (WATTS) | (RPM) | (CFM) | (inch-$H_2O$) | (dB(A)) | (g) | |
| GF80251B5-0000-AD9 | ◐ | 12 | 145 | 1.74 | 3200 | 41.0 | 0.18 | 33.0 | 87.0 | 1 |
| GF80251B6-0000-AD9 | ◐ | 12 | 120 | 1.44 | 2900 | 37.0 | 0.15 | 30.0 | 87.0 | 2 |
| GF80251B7-0000-AD9 | ◐ | 12 | 84 | 1.01 | 2600 | 33.0 | 0.11 | 28.0 | 87.0 | 3 |
| GF80252B5-0000-AD9 | ◐ | 24 | 73 | 1.76 | 3200 | 41.0 | 0.18 | 33.0 | 87.0 | 1 |
| GF80252B6-0000-AD9 | ◐ | 24 | 59 | 1.42 | 2900 | 37.0 | 0.15 | 30.0 | 87.0 | 2 |
| GF80252B7-0000-AD9 | ◐ | 24 | 45 | 1.08 | 2600 | 33.0 | 0.11 | 28.0 | 87.0 | 3 |

### Air Flow-Static Pressure Characteristics

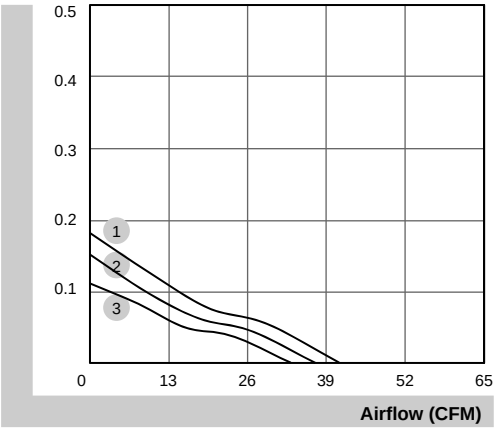


### External dimensions(mm)

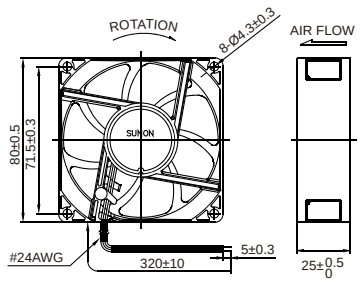


INLET

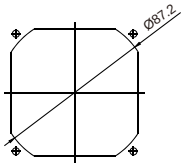


OUTLET

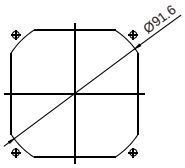


*All model could be customized. Please contact with Sunon Sales.
*Specifications are subject to change without notice. Please Visit SUNON website at www.sunon.com for update information.

# 80x80x32 mm (IP56)

## 50.3~59.4 CFM

### Specifications

| Model | Bearing | Rating Voltage | Power Current | Power Consumption | Speed | Air Flow | Static Pressure | Noise | Weight | Curve |
|---|---|---|---|---|---|---|---|---|---|---|
| | ◐ 2BALL ○ Sleeve | (VDC) | (mA) | (WATTS) | (RPM) | (CFM) | (inch-$H_2O$) | (dB(A)) | (g) | |
| GF80321B1-0000-AC9 | ◐ | 12 | 310 | 3.72 | 4800 | 59.4 | 0.36 | 45.2 | 109.0 | 1 |
| GF80321B2-0000-AC9 | ◐ | 12 | 230 | 2.76 | 4500 | 55.9 | 0.32 | 43.1 | 109.0 | 2 |
| GF80321B3-0000-AC9 | ◐ | 12 | 190 | 2.28 | 4100 | 50.3 | 0.27 | 41.1 | 109.0 | 3 |

### Air Flow-Static Pressure Characteristics

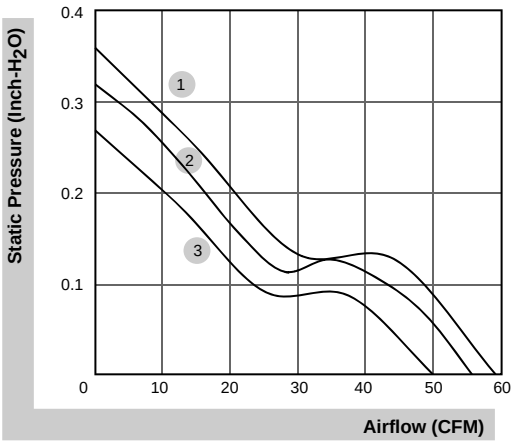


### External dimensions(mm)

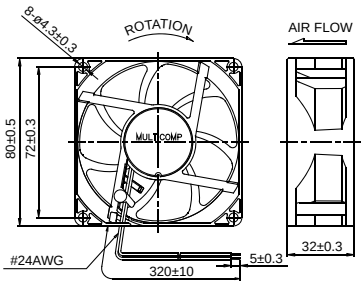


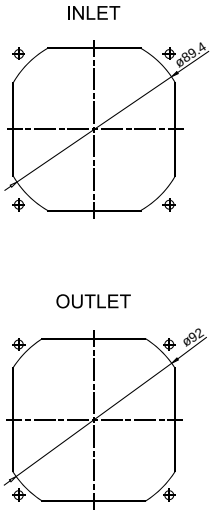


*All model could be customized. Please contact with Sunon Sales.
*Specifications are subject to change without notice. Please Visit SUNON website at www.sunon.com for update information.

# 80x80x32 mm (IP68)

## 50.3~59.4 CFM

### Specifications

| Model | Bearing | Rating Voltage | Power Current | Power Consumption | Speed | Air Flow | Static Pressure | Noise | Weight | Curve |
|---|---|---|---|---|---|---|---|---|---|---|
| | ◐ 2BALL ○ Sleeve | (VDC) | (mA) | (WATTS) | (RPM) | (CFM) | (inch-$H_2O$) | (dB(A)) | (g) | |
| GF80321B1-0000-AE9 | ◐ | 12 | 310 | 3.72 | 4800 | 59.4 | 0.36 | 45.2 | 109.0 | 1 |
| GF80321B2-0000-AE9 | ◐ | 12 | 230 | 2.76 | 4500 | 55.9 | 0.32 | 43.1 | 109.0 | 2 |
| GF80321B3-0000-AE9 | ◐ | 12 | 190 | 2.28 | 4100 | 50.3 | 0.27 | 41.1 | 109.0 | 3 |

### Air Flow-Static Pressure Characteristics

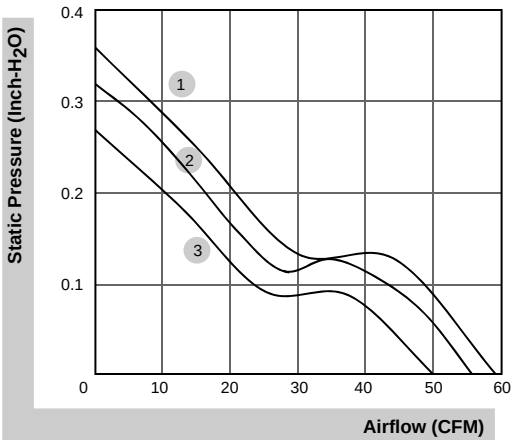


### External dimensions(mm)

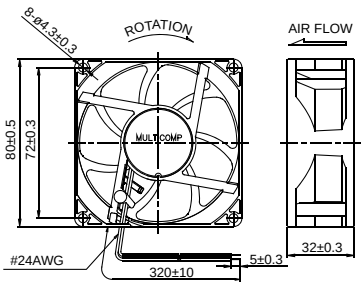


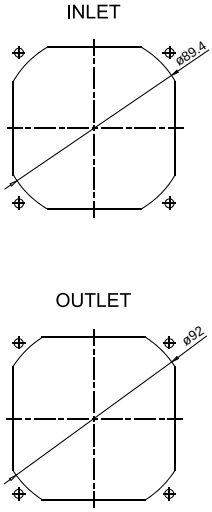


*All model could be customized. Please contact with Sunon Sales.
*Specifications are subject to change without notice. Please Visit SUNON website at www.sunon.com for update information.

# 80x80x38 mm

## 59.5~84.1 CFM

### Specifications

| Model | Bearing | Rating Voltage | Power Current | Power Consumption | Speed | Air Flow | Static Pressure | Noise | Weight | Curve |
|---|---|---|---|---|---|---|---|---|---|---|
| | ◐ 2BALL ○ Sleeve | (VDC) | (mA) | (WATTS) | (RPM) | (CFM) | (inch-$H_2O$) | (dB(A)) | (g) | |
| PMD1208PMB1-A (2).GN | ◐ | 12 | 760 | 9.1 | 5700 | 84.1 | 0.74 | 55.2 | 175.0 | 1 |
| PMD1208PMB2-A (2).GN | ◐ | 12 | 530 | 6.4 | 4900 | 74.5 | 0.57 | 51.6 | 175.0 | 2 |
| PMD1208PMB3-A (2).GN | ◐ | 12 | 370 | 4.4 | 4200 | 59.5 | 0.43 | 47.3 | 175.0 | 3 |
| PMD2408PMB1-A (2).GN | ◐ | 24 | 400 | 9.6 | 5700 | 84.1 | 0.74 | 55.2 | 175.0 | 1 |
| PMD2408PMB2-A (2).GN | ◐ | 24 | 300 | 7.2 | 4900 | 74.5 | 0.57 | 51.6 | 175.0 | 2 |
| PMD2408PMB3-A (2).GN | ◐ | 24 | 200 | 4.8 | 4200 | 59.5 | 0.43 | 47.3 | 175.0 | 3 |

### Air Flow-Static Pressure Characteristics

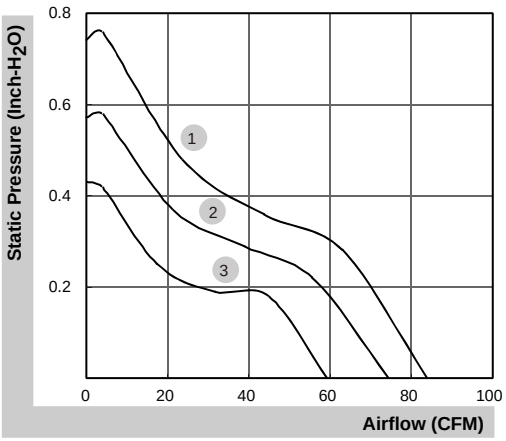


### External dimensions(mm)

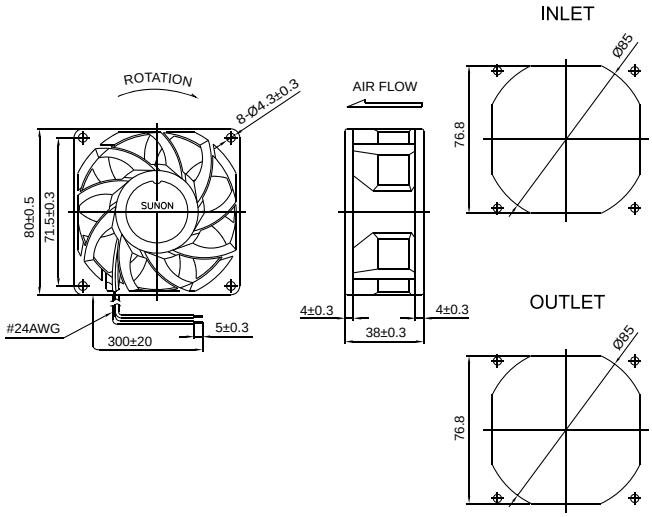


*All model could be customized. Please contact with Sunon Sales.
*Specifications are subject to change without notice. Please Visit SUNON website at www.sunon.com for update information.

# 92x92x25 mm

## 65.0~75.0 CFM

### Specifications

| MAGLev by SUNON | Bearing | Rating Voltage | Power Current | Power Consumption | Speed | Air Flow | Static Pressure | Noise | Weight | Curve |
|---|---|---|---|---|---|---|---|---|---|---|
| | ● VAPO | (VDC) | (mA) | (WATTS) | (RPM) | (CFM) | (inch-$H_2O$) | (dB(A)) | (g) | |
| PF92251V1-10000-A99 | ● | 12 | 370 | 4.44 | 4500 | 75.0 | 0.35 | 45.5 | 106.0 | 1 |
| PF92251V2-10000-A99 | ● | 12 | 280 | 3.36 | 4200 | 70.0 | 0.30 | 43.7 | 106.0 | 2 |
| PF92251V3-10000-A99 | ● | 12 | 230 | 2.76 | 3900 | 65.0 | 0.25 | 41.6 | 106.0 | 3 |
| PF92252V1-10000-A99 | ● | 24 | 210 | 5.04 | 4500 | 75.0 | 0.35 | 45.5 | 106.0 | 1 |
| PF92252V2-10000-A99 | ● | 24 | 145 | 3.48 | 4200 | 70.0 | 0.30 | 43.7 | 106.0 | 2 |
| PF92252V3-10000-A99 | ● | 24 | 126 | 3.03 | 3900 | 65.0 | 0.25 | 41.6 | 106.0 | 3 |

### Air Flow-Static Pressure Characteristics

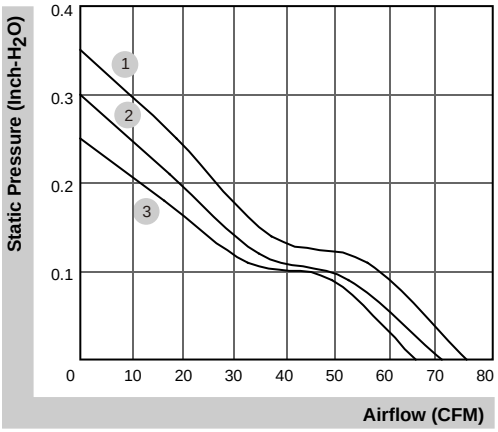


### External dimensions(mm)

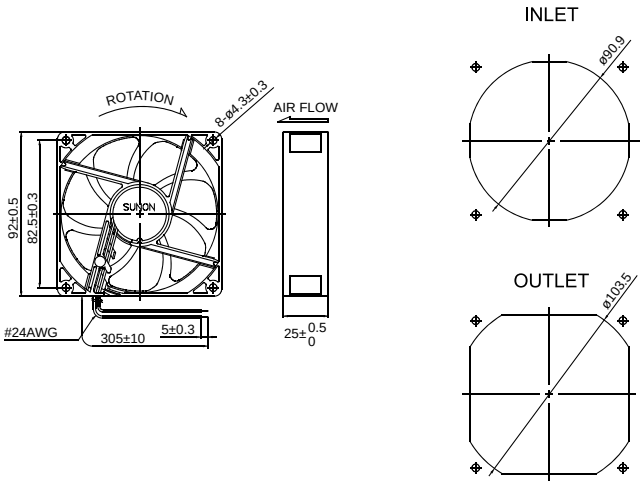


*All model could be customized. Please contact with Sunon Sales.
*Specifications are subject to change without notice. Please Visit SUNON website at www.sunon.com for update information.

# 92x92x25 mm

## 65.0~75.0 CFM

### Specifications

| Model | Bearing | Rating Voltage | Power Current | Power Consumption | Speed | Air Flow | Static Pressure | Noise | Weight | Curve |
|---|---|---|---|---|---|---|---|---|---|---|
| | ◐ 2BALL ○ Sleeve | (VDC) | (mA) | (WATTS) | (RPM) | (CFM) | (inch-$H_2O$) | (dB(A)) | (g) | |
| PF92251B1-0000-A99 | ◐ | 12 | 393 | 4.70 | 4500 | 75.0 | 0.35 | 47.0 | 103.0 | 1 |
| PF92251B2-0000-A99 | ◐ | 12 | 325 | 3.90 | 4200 | 70.0 | 0.30 | 45.0 | 103.0 | 2 |
| PF92251B3-0000-A99 | ◐ | 12 | 260 | 3.10 | 3900 | 65.0 | 0.25 | 43.0 | 103.0 | 3 |
| PE92252B1-0000-A99 | ◐ | 24 | 220 | 5.28 | 4500 | 75.0 | 0.35 | 47.0 | 103.0 | 1 |
| PE92252B2-0000-A99 | ◐ | 24 | 180 | 4.32 | 4200 | 70.0 | 0.30 | 45.0 | 103.0 | 2 |
| PE92252B3-0000-A99 | ◐ | 24 | 155 | 3.72 | 3900 | 65.0 | 0.25 | 43.0 | 103.0 | 3 |
| PE92254B1-0000-A99 | ◐ | 48 | 125 | 6.00 | 4500 | 75.0 | 0.35 | 47.0 | 103.0 | 1 |
| PE92254B2-0000-A99 | ◐ | 48 | 108 | 5.19 | 4200 | 70.0 | 0.30 | 45.0 | 103.0 | 2 |
| PE92254B3-0000-A99 | ◐ | 48 | 103 | 4.95 | 3900 | 65.0 | 0.25 | 43.0 | 103.0 | 3 |

### Air Flow-Static Pressure Characteristics

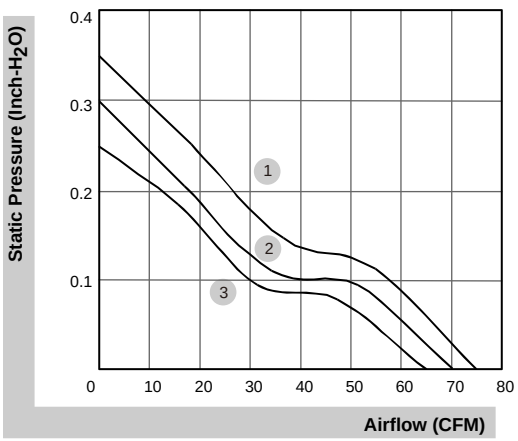


### External dimensions(mm)

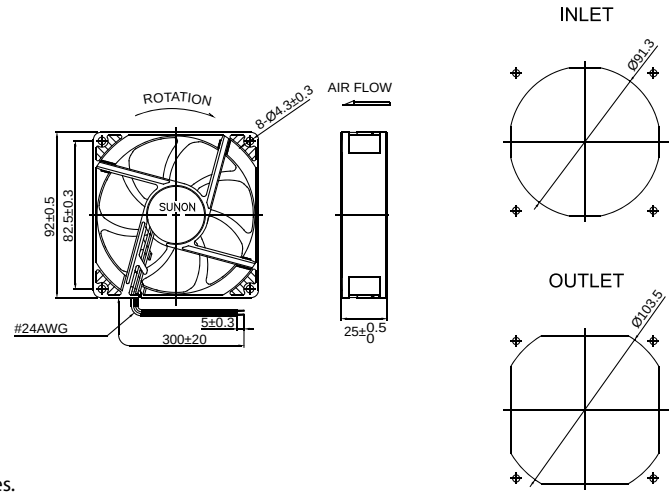


*All model could be customized. Please contact with Sunon Sales.
*Specifications are subject to change without notice. Please Visit SUNON website at www.sunon.com for update information.

# 92x92x25 mm

## 39.5~51.5 CFM

### Specifications

| MAGLev by SUNON | Bearing | Rating Voltage | Power Current | Power Consumption | Speed | Air Flow | Static Pressure | Noise | Weight | Curve |
|---|---|---|---|---|---|---|---|---|---|---|
| | ● VAPO | (VDC) | (mA) | (WATTS) | (RPM) | (CFM) | (inch-$H_2O$) | (dB(A)) | (g) | |
| MF92251V1-10000-A99 | ● | 12 | 140 | 1.68 | 3000 | 51.5 | 0.15 | 34.0 | 92.0 | 1 |
| MF92251V2-10000-A99 | ● | 12 | 105 | 1.26 | 2700 | 45.0 | 0.13 | 32.0 | 92.0 | 2 |
| MF92251V3-10000-A99 | ● | 12 | 75 | 0.90 | 2400 | 39.5 | 0.10 | 28.0 | 92.0 | 3 |
| MF92252V1-10000-A99 | ● | 24 | 75 | 1.80 | 3000 | 51.5 | 0.15 | 34.0 | 92.0 | 1 |
| MF92252V2-10000-A99 | ● | 24 | 55 | 1.32 | 2700 | 45.0 | 0.13 | 32.0 | 92.0 | 2 |
| MF92252V3-10000-A99 | ● | 24 | 42 | 1.01 | 2400 | 39.5 | 0.10 | 28.0 | 92.0 | 3 |

| Model | Bearing | Rating Voltage | Power Current | Power Consumption | Speed | Air Flow | Static Pressure | Noise | Weight | Curve |
|---|---|---|---|---|---|---|---|---|---|---|
| | ◐ 2BALL ○ Sleeve | (VDC) | (mA) | (WATTS) | (RPM) | (CFM) | (inch-$H_2O$) | (dB(A)) | (g) | |
| EF92251S1-10000-A99 | ○ | 12 | 140 | 1.68 | 3000 | 51.5 | 0.15 | 34.0 | 92.0 | 1 |
| EF92251S2-10000-A99 | ○ | 12 | 110 | 1.32 | 2700 | 45.0 | 0.13 | 32.0 | 92.0 | 2 |
| EF92251S3-10000-A99 | ○ | 12 | 80 | 0.96 | 2400 | 39.5 | 0.10 | 28.0 | 92.0 | 3 |
| EF92252S1-10000-A99 | ○ | 24 | 60 | 1.44 | 3000 | 51.5 | 0.15 | 34.0 | 92.0 | 1 |

### Air Flow-Static Pressure Characteristics

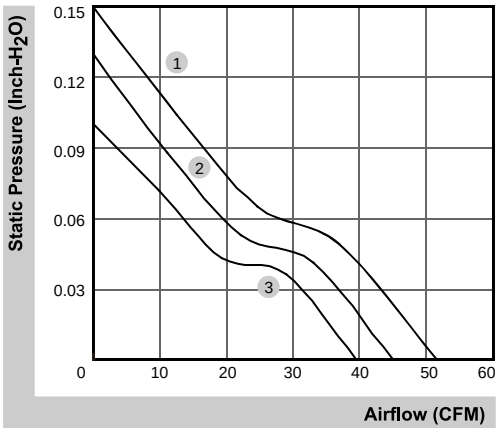


### External dimensions(mm)

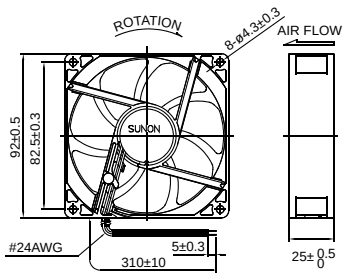


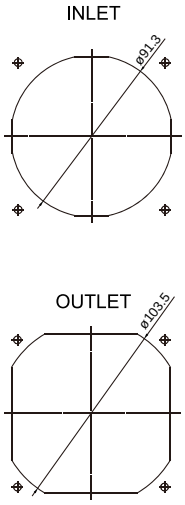


*All model could be customized. Please contact with Sunon Sales.
*Specifications are subject to change without notice. Please Visit SUNON website at www.sunon.com for update information.

# 92x92x25 mm

## 39.5~55.0 CFM

### Specifications

| Model | Bearing | Rating Voltage | Power Current | Power Consumption | Speed | Air Flow | Static Pressure | Noise | Weight | Curve |
|---|---|---|---|---|---|---|---|---|---|---|
| | ◐ 2BALL ○ Sleeve | (VDC) | (mA) | (WATTS) | (RPM) | (CFM) | (inch-$H_2O$) | (dB(A)) | (g) | |
| EE92251BX-0000-A99 | ◐ | 12 | 190 | 2.30 | 3400 | 55.0 | 0.21 | 37.5 | 89.0 | 1 |
| EE92251B1-0000-A99 | ◐ | 12 | 165 | 2.00 | 3000 | 51.5 | 0.15 | 34.0 | 94.0 | 2 |
| EE92251B2-0000-999 | ◐ | 12 | 135 | 1.60 | 2700 | 45.0 | 0.13 | 32.0 | 94.0 | 3 |
| EE92251B3-0000-999 | ◐ | 12 | 105 | 1.30 | 2400 | 39.5 | 0.10 | 28.0 | 94.0 | 4 |
| EE92252BX-0000-A99 | ◐ | 24 | 100 | 2.40 | 3400 | 55.0 | 0.21 | 37.5 | 89.0 | 1 |
| EE92252B1-0000-A99 | ◐ | 24 | 87 | 2.10 | 3000 | 51.5 | 0.15 | 34.0 | 94.0 | 2 |
| EE92252B2-0000-999 | ◐ | 24 | 70 | 1.70 | 2700 | 45.0 | 0.13 | 32.0 | 94.0 | 3 |
| EE92252B3-0000-999 | ◐ | 24 | 57 | 1.40 | 2400 | 39.5 | 0.10 | 28.0 | 94.0 | 4 |

### Air Flow-Static Pressure Characteristics

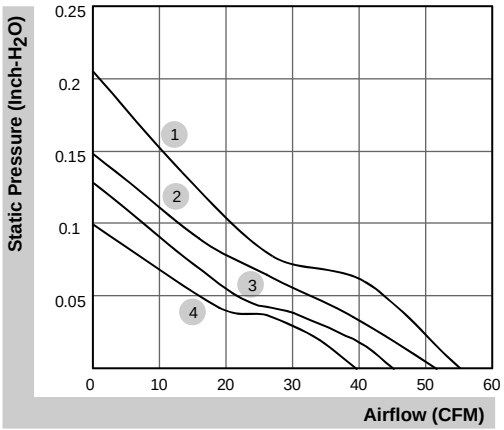


### External dimensions(mm)

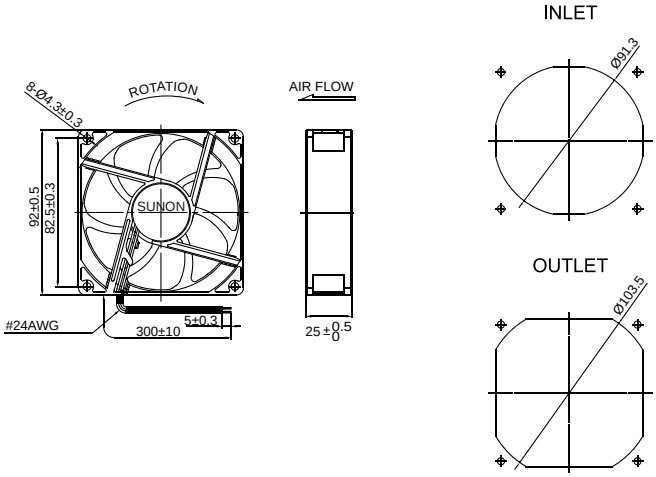


*All model could be customized. Please contact with Sunon Sales.
*Specifications are subject to change without notice. Please Visit SUNON website at www.sunon.com for update information.

# 92x92x25 mm

## 28.4 CFM

### Specifications

| MAGLev by SUNON | Bearing | Rating Voltage | Power Current | Power Consumption | Speed | Air Flow | Static Pressure | Noise | Weight | Curve |
|---|---|---|---|---|---|---|---|---|---|---|
| | ● VAPO | (VDC) | (mA) | (WATTS) | (RPM) | (CFM) | (inch-$H_2O$) | (dB(A)) | (g) | |
| HA92251V4-10000-A99 | ● | 12 | 45 | 0.54 | 1700 | 28.4 | 0.05 | 17.7 | 92.0 | 1 |

### Air Flow-Static Pressure Characteristics

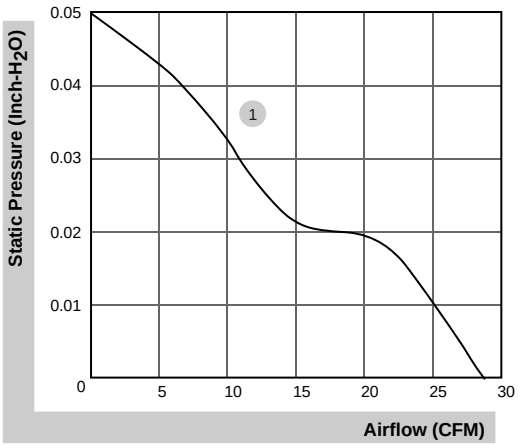


### External dimensions(mm)

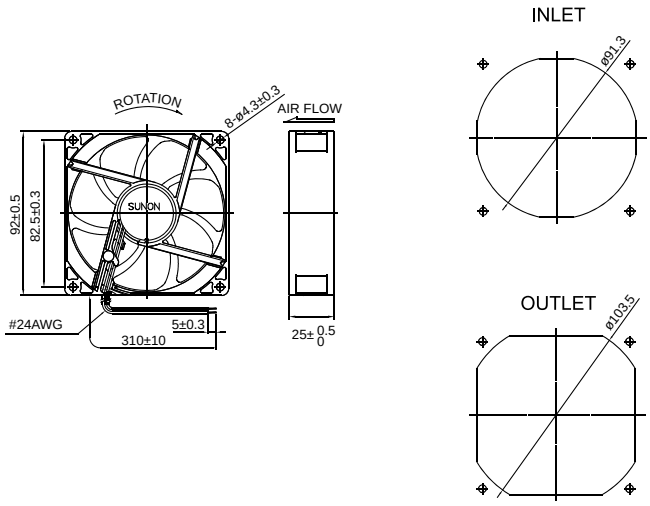


*All model could be customized. Please contact with Sunon Sales.
*Specifications are subject to change without notice. Please Visit SUNON website at www.sunon.com for update information.

# 92x92x25 mm (IP56)

## 39.5~75.0 CFM

### Specifications

| Model | Bearing | Rating Voltage | Power Current | Power Consumption | Speed | Air Flow | Static Pressure | Noise | Weight | Curve |
|---|---|---|---|---|---|---|---|---|---|---|
| | ◉ 2BALL ○ Sleeve | (VDC) | (mA) | (WATTS) | (RPM) | (CFM) | (inch-$H_2O$) | (dB(A)) | (g) | |
| GF92251B1-0000-AC9 | ◉ | 12 | 393 | 4.72 | 4500 | 75.0 | 0.35 | 47.0 | 113.0 | 1 |
| GF92251B2-0000-AC9 | ◉ | 12 | 300 | 3.60 | 4200 | 70.0 | 0.30 | 45.0 | 113.0 | 2 |
| GF92251B3-0000-AC9 | ◉ | 12 | 230 | 2.76 | 3900 | 65.0 | 0.25 | 43.0 | 113.0 | 3 |
| GF92251B5-0000-AC9 | ◉ | 12 | 165 | 1.98 | 3000 | 51.5 | 0.15 | 34.0 | 99.0 | 4 |
| GF92251B6-0000-AC9 | ◉ | 12 | 135 | 1.62 | 2700 | 45.0 | 0.13 | 32.0 | 99.0 | 5 |
| GF92251B7-0000-AC9 | ◉ | 12 | 91 | 1.10 | 2400 | 39.5 | 0.10 | 28.0 | 99.0 | 6 |
| GE92252B1-0000-AC9 | ◉ | 24 | 220 | 5.28 | 4500 | 75.0 | 0.35 | 47.0 | 113.0 | 1 |
| GE92252B2-0000-AC9 | ◉ | 24 | 180 | 4.32 | 4200 | 70.0 | 0.30 | 45.0 | 113.0 | 2 |
| GE92252B3-0000-AC9 | ◉ | 24 | 155 | 3.72 | 3900 | 65.0 | 0.25 | 43.0 | 113.0 | 3 |
| GF92252B5-0000-AC9 | ◉ | 24 | 87 | 2.09 | 3000 | 51.5 | 0.15 | 34.0 | 99.0 | 4 |
| GF92252B6-0000-AC9 | ◉ | 24 | 65 | 1.56 | 2700 | 45.0 | 0.13 | 32.0 | 99.0 | 5 |
| GF92252B7-0000-AC9 | ◉ | 24 | 47 | 1.13 | 2400 | 39.5 | 0.10 | 28.0 | 99.0 | 6 |
| GE92254B1-0000-AC9 | ◉ | 48 | 125 | 6.00 | 4500 | 75.0 | 0.35 | 47.0 | 113.0 | 1 |
| GE92254B2-0000-AC9 | ◉ | 48 | 108 | 5.19 | 4200 | 70.0 | 0.30 | 45.0 | 113.0 | 2 |
| GE92254B3-0000-AC9 | ◉ | 48 | 85 | 4.08 | 3900 | 65.0 | 0.25 | 43.0 | 113.0 | 3 |

### Air Flow-Static Pressure Characteristics

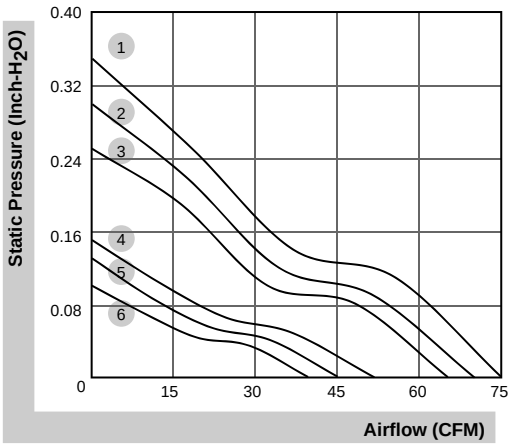


### External dimensions(mm)

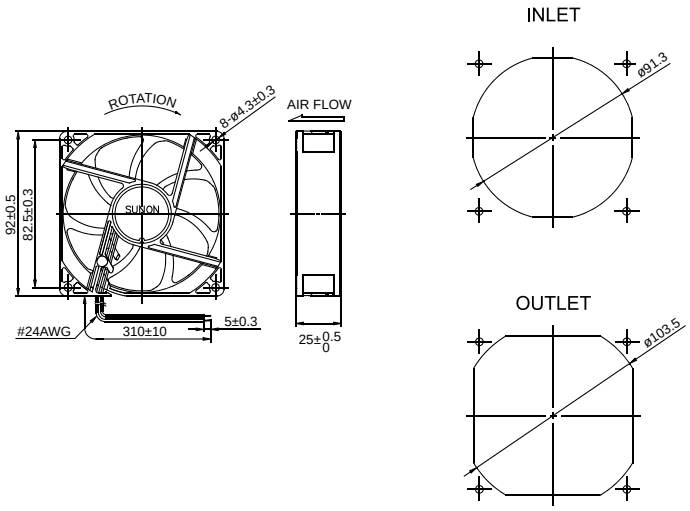


*All model could be customized. Please contact with Sunon Sales.
*Specifications are subject to change without notice. Please Visit SUNON website at www.sunon.com for update information.

# 92x92x25 mm (IP68)

## 39.5~75.0 CFM

### Specifications

| Model | Bearing | Rating Voltage | Power Current | Power Consumption | Speed | Air Flow | Static Pressure | Noise | Weight | Curve |
|---|---|---|---|---|---|---|---|---|---|---|
| | ⊗ 2BALL ○ Sleeve | (VDC) | (mA) | (WATTS) | (RPM) | (CFM) | (inch-$H_2O$) | (dB(A)) | (g) | |
| GF92251B1-0000-AE9 | ⊗ | 12 | 393 | 4.72 | 4500 | 75.0 | 0.35 | 47.0 | 113.0 | 1 |
| GF92251B2-0000-AE9 | ⊗ | 12 | 300 | 3.60 | 4200 | 70.0 | 0.30 | 45.0 | 113.0 | 2 |
| GF92251B3-0000-AE9 | ⊗ | 12 | 230 | 2.76 | 3900 | 65.0 | 0.25 | 43.0 | 113.0 | 3 |
| GF92251B5-0000-AE9 | ⊗ | 12 | 165 | 1.98 | 3000 | 51.5 | 0.15 | 34.0 | 99.0 | 4 |
| GF92251B6-0000-AE9 | ⊗ | 12 | 135 | 1.62 | 2700 | 45.0 | 0.13 | 32.0 | 99.0 | 5 |
| GF92251B7-0000-AE9 | ⊗ | 12 | 91 | 1.10 | 2400 | 39.5 | 0.10 | 28.0 | 99.0 | 6 |
| GE92252B1-0000-AE9 | ⊗ | 24 | 220 | 5.28 | 4500 | 75.0 | 0.35 | 47.0 | 113.0 | 1 |
| GE92252B2-0000-AE9 | ⊗ | 24 | 180 | 4.32 | 4200 | 70.0 | 0.30 | 45.0 | 113.0 | 2 |
| GE92252B3-0000-AE9 | ⊗ | 24 | 155 | 3.72 | 3900 | 65.0 | 0.25 | 43.0 | 113.0 | 3 |
| GF92252B5-0000-AE9 | ⊗ | 24 | 87 | 2.09 | 3000 | 51.5 | 0.15 | 34.0 | 99.0 | 4 |
| GF92252B6-0000-AE9 | ⊗ | 24 | 65 | 1.56 | 2700 | 45.0 | 0.13 | 32.0 | 99.0 | 5 |
| GF92252B7-0000-AE9 | ⊗ | 24 | 47 | 1.13 | 2400 | 39.5 | 0.10 | 28.0 | 99.0 | 6 |
| GE92254B1-0000-AE9 | ⊗ | 48 | 125 | 6.00 | 4500 | 75.0 | 0.35 | 47.0 | 113.0 | 1 |
| GE92254B2-0000-AE9 | ⊗ | 48 | 108 | 5.19 | 4200 | 70.0 | 0.30 | 45.0 | 113.0 | 2 |
| GE92254B3-0000-AE9 | ⊗ | 48 | 85 | 4.08 | 3900 | 65.0 | 0.25 | 43.0 | 113.0 | 3 |

### Air Flow-Static Pressure Characteristics

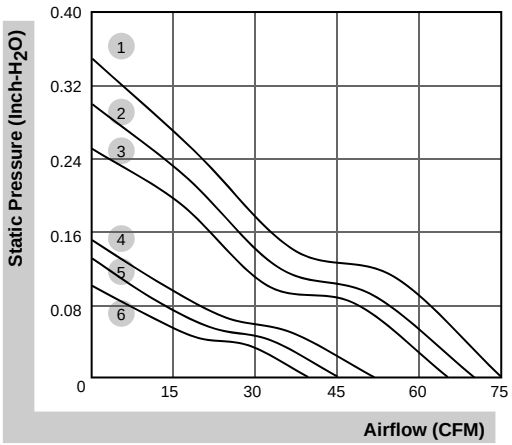


### External dimensions(mm)

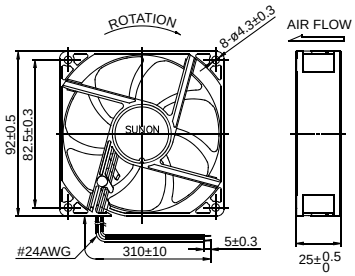


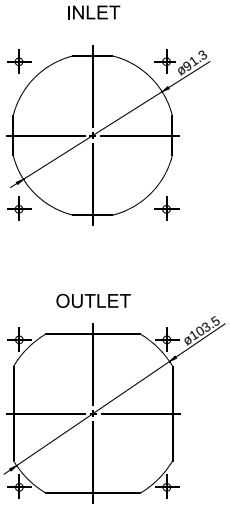


*All model could be customized. Please contact with Sunon Sales.
*Specifications are subject to change without notice. Please Visit SUNON website at www.sunon.com for update information.

# 92x92x25 mm (GR487)

## 39.5~51.5 CFM

### Specifications

| Model | Bearing | Rating Voltage | Power Current | Power Consumption | Speed | Air Flow | Static Pressure | Noise | Weight | Curve |
|---|---|---|---|---|---|---|---|---|---|---|
| | ◉ 2BALL ○ Sleeve | (VDC) | (mA) | (WATTS) | (RPM) | (CFM) | (inch-$H_2O$) | (dB(A)) | (g) | |
| GF92251B5-0000-AD9 | ◉ | 12 | 165 | 1.98 | 3000 | 51.5 | 0.15 | 34.0 | 99.0 | 1 |
| GF92251B6-0000-AD9 | ◉ | 12 | 135 | 1.62 | 2700 | 45.0 | 0.13 | 32.0 | 99.0 | 2 |
| GF92251B7-0000-AD9 | ◉ | 12 | 91 | 1.10 | 2400 | 39.5 | 0.10 | 28.0 | 99.0 | 3 |
| GF92252B5-0000-AD9 | ◉ | 24 | 87 | 2.09 | 3000 | 51.5 | 0.15 | 34.0 | 99.0 | 1 |
| GF92252B6-0000-AD9 | ◉ | 24 | 65 | 1.56 | 2700 | 45.0 | 0.13 | 32.0 | 99.0 | 2 |
| GF92252B7-0000-AD9 | ◉ | 24 | 47 | 1.13 | 2400 | 39.5 | 0.10 | 28.0 | 99.0 | 3 |

### Air Flow-Static Pressure Characteristics

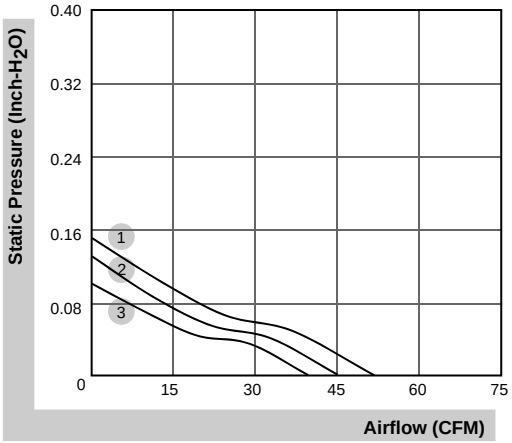


### External dimensions(mm)

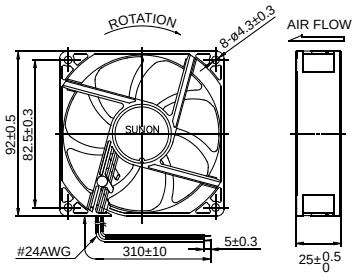


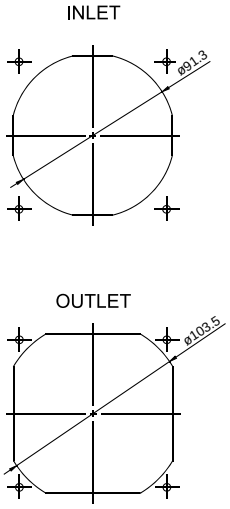


*All model could be customized. Please contact with Sunon Sales.
*Specifications are subject to change without notice. Please Visit SUNON website at www.sunon.com for update information.

# 92x92x38 mm

## 91.7~120.2 CFM

### Specifications

| Model | Bearing | Rating Voltage | Power Current | Power Consumption | Speed | Air Flow | Static Pressure | Noise | Weight | Curve |
|---|---|---|---|---|---|---|---|---|---|---|
| | ◐ 2BALL ○ Sleeve | (VDC) | (mA) | (WATTS) | (RPM) | (CFM) | (inch-$H_2O$) | (dB(A)) | (g) | |
| PMD1209PMB1-A (2).GN | ◐ | 12 | 1040 | 12.5 | 4900 | 120.2 | 0.71 | 57.6 | 190.0 | 1 |
| PMD1209PMB2-A (2).GN | ◐ | 12 | 710 | 8.5 | 4400 | 106.3 | 0.56 | 53.8 | 190.0 | 2 |
| PMD1209PMB3-A (2).GN | ◐ | 12 | 470 | 5.6 | 3800 | 91.7 | 0.43 | 50.3 | 190.0 | 3 |
| PMD2409PMB1-A (2).GN | ◐ | 24 | 510 | 12.2 | 4900 | 120.2 | 0.71 | 57.6 | 190.0 | 1 |
| PMD2409PMB2-A (2).GN | ◐ | 24 | 400 | 9.6 | 4400 | 106.3 | 0.56 | 53.8 | 190.0 | 2 |
| PMD2409PMB3-A (2).GN | ◐ | 24 | 250 | 6.0 | 3800 | 91.7 | 0.43 | 50.3 | 190.0 | 3 |

### Air Flow-Static Pressure Characteristics

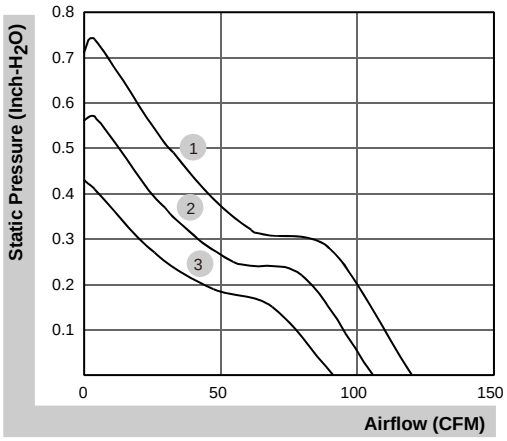


### External dimensions(mm)

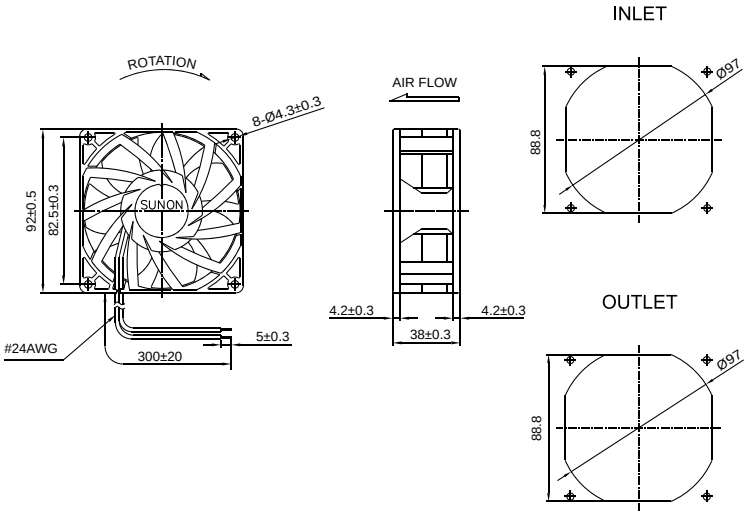


*All model could be customized. Please contact with Sunon Sales.
*Specifications are subject to change without notice. Please Visit SUNON website at www.sunon.com for update information.

# 120x120x25 mm

## 120.0~150.0 CFM

### Specifications

| Model | Bearing | Rating Voltage | Power Current | Power Consumption | Speed | Air Flow | Static Pressure | Noise | Weight | Curve |
|---|---|---|---|---|---|---|---|---|---|---|
| | ◐ 2BALL ○ Sleeve | (VDC) | (mA) | (WATTS) | (RPM) | (CFM) | (inch-$H_2O$) | (dB(A)) | (g) | |
| PMD1212PTB1-A (2).GN | ◐ | 12 | 1000 | 12.0 | 4500 | 150.0 | 0.62 | 54.0 | 220.0 | 1 |
| PMD1212PTB2-A (2).GN | ◐ | 12 | 720 | 8.6 | 4000 | 133.0 | 0.50 | 51.0 | 220.0 | 2 |
| PMD1212PTB3-A (2).GN | ◐ | 12 | 540 | 6.5 | 3600 | 120.0 | 0.41 | 48.0 | 220.0 | 3 |
| PMD2412PTB1-A (2).GN | ◐ | 24 | 490 | 11.8 | 4500 | 150.0 | 0.62 | 54.0 | 220.0 | 1 |
| PMD2412PTB2-A (2).GN | ◐ | 24 | 360 | 8.6 | 4000 | 133.0 | 0.50 | 51.0 | 220.0 | 2 |
| PMD2412PTB3-A (2).GN | ◐ | 24 | 280 | 6.7 | 3600 | 120.0 | 0.41 | 48.0 | 220.0 | 3 |
| PMD4812PTB1-A (2).GN | ◐ | 48 | 260 | 12.5 | 4500 | 150.0 | 0.62 | 54.0 | 220.0 | 1 |

### Air Flow-Static Pressure Characteristics

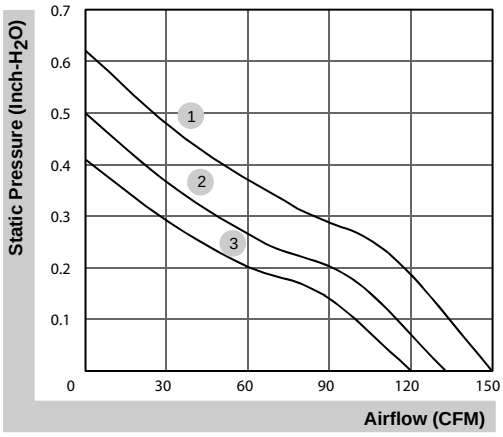


### External dimensions(mm)

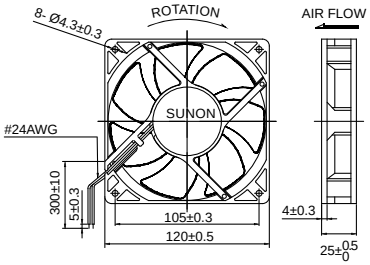


INLET

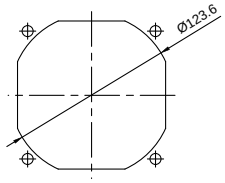


OUTLET

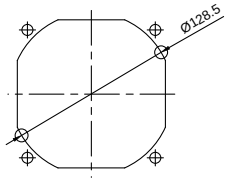


*All model could be customized. Please contact with Sunon Sales.
*Specifications are subject to change without notice. Please Visit SUNON website at www.sunon.com for update information.

# 120x120x25 mm

## 75.0~108.2 CFM

### Specifications

| MAGLev by SUNON | Bearing | Rating Voltage | Power Current | Power Consumption | Speed | Air Flow | Static Pressure | Noise | Weight | Curve |
|---|---|---|---|---|---|---|---|---|---|---|
| | ● VAPO | (VDC) | (mA) | (WATTS) | (RPM) | (CFM) | (inch-$H_2O$) | (dB(A)) | (g) | |
| MFC0251V1-0000-A99 | ● | 12 | 350 | 4.20 | 3100 | 108.2 | 0.28 | 44.5 | 162.0 | 1 |
| MFC0251V2-0000-A99 | ● | 12 | 250 | 3.00 | 2700 | 93.0 | 0.22 | 40.5 | 162.0 | 2 |
| MFC0251V3-0000-A99 | ● | 12 | 140 | 1.68 | 2200 | 75.0 | 0.16 | 34.0 | 162.0 | 3 |
| MEC0252V1-0000-A99 | ● | 24 | 207 | 5.00 | 3100 | 108.2 | 0.28 | 44.5 | 162.0 | 1 |
| MEC0252V2-0000-A99 | ● | 24 | 146 | 3.50 | 2700 | 93.0 | 0.22 | 40.5 | 162.0 | 2 |
| MEC0252V3-0000-A99 | ● | 24 | 84 | 2.00 | 2200 | 75.0 | 0.16 | 34.0 | 162.0 | 3 |

| Model | Bearing | Rating Voltage | Power Current | Power Consumption | Speed | Air Flow | Static Pressure | Noise | Weight | Curve |
|---|---|---|---|---|---|---|---|---|---|---|
| | ◐ 2BALL ○ Sleeve | (VDC) | (mA) | (WATTS) | (RPM) | (CFM) | (inch-$H_2O$) | (dB(A)) | (g) | |
| EEC0251B1-0000-A99 | ◐ | 12 | 451 | 5.4 | 3100 | 108.2 | 0.28 | 44.5 | 157.0 | 1 |
| EEC0251B2-0000-A99 | ◐ | 12 | 279 | 3.4 | 2700 | 93.0 | 0.22 | 40.5 | 157.0 | 2 |
| EEC0251B3-0000-A99 | ◐ | 12 | 161 | 1.9 | 2200 | 75.0 | 0.16 | 34.0 | 157.0 | 3 |
| EEC0252B1-0000-A99 | ◐ | 24 | 207 | 5.0 | 3100 | 108.2 | 0.28 | 44.5 | 157.0 | 1 |
| EEC0252B2-0000-A99 | ◐ | 24 | 146 | 3.5 | 2700 | 93.0 | 0.22 | 40.5 | 157.0 | 2 |
| EEC0252B3-0000-A99 | ◐ | 24 | 84 | 2.0 | 2200 | 75.0 | 0.16 | 34.0 | 157.0 | 3 |
| EEC0254B1-0000-A99 | ◐ | 48 | 119 | 5.7 | 3100 | 108.2 | 0.28 | 44.5 | 157.0 | 1 |
| EEC0254B2-0000-A99 | ◐ | 48 | 79 | 3.8 | 2700 | 93.0 | 0.22 | 40.5 | 157.0 | 2 |
| EEC0254B3-0000-A99 | ◐ | 48 | 54 | 2.6 | 2200 | 75.0 | 0.16 | 34.0 | 157.0 | 3 |

### Air Flow-Static Pressure Characteristics

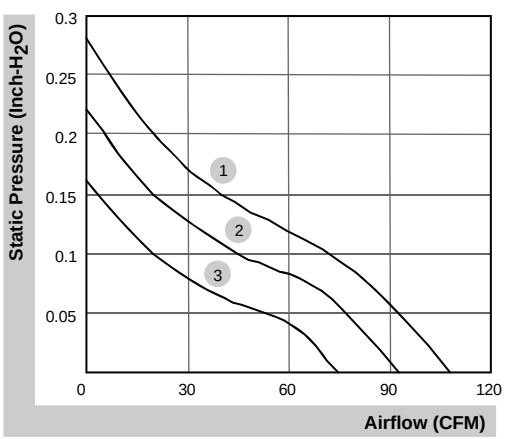


### External dimensions(mm)

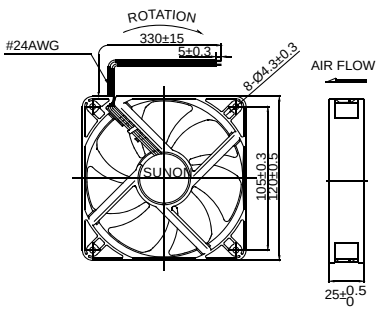


INLET

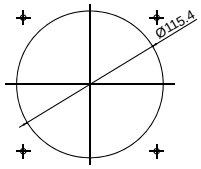


OUTLET

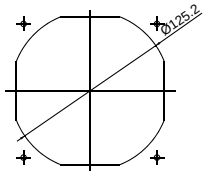


*All model could be customized. Please contact with Sunon Sales.
*Specifications are subject to change without notice. Please Visit SUNON website at www.sunon.com for update information.

# 120x120x25 mm

## 55.0 CFM

### Specifications

| Model | Bearing | Rating Voltage | Power Current | Power Consumption | Speed | Air Flow | Static Pressure | Noise | Weight | Curve |
|---|---|---|---|---|---|---|---|---|---|---|
| | ◐ 2BALL<br>○ Sleeve | (VDC) | (mA) | (WATTS) | (RPM) | (CFM) | (inch-$H_2O$) | (dB(A)) | (g) | |
| HAC0251S4-0000-999 | ○ | 12 | 155 | 1.9 | 1600 | 55.0 | 0.06 | 29.6 | 99.0 | 1 |

### Air Flow-Static Pressure Characteristics

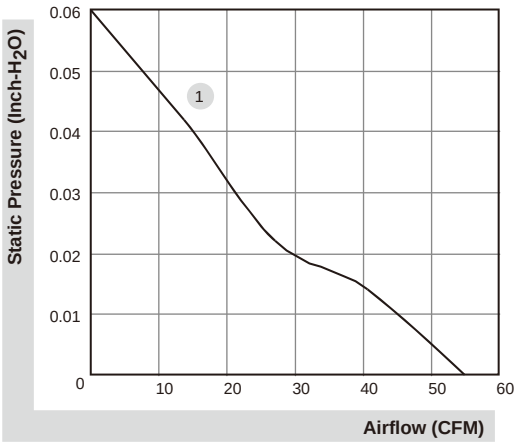


### External dimensions(mm)

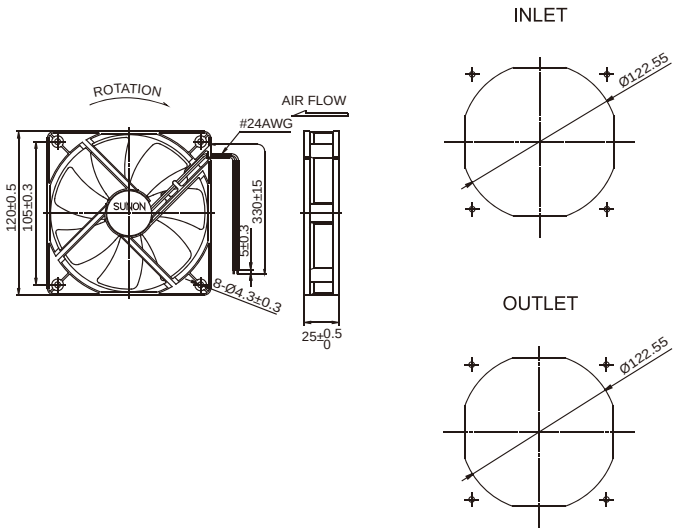


*All model could be customized. Please contact with Sunon Sales.
*Specifications are subject to change without notice. Please Visit SUNON website at www.sunon.com for update information.

# 120x120x38 mm

## 170.0~190.0 CFM

### Specifications

| Model | Bearing | Rating Voltage | Power Current | Power Consumption | Speed | Air Flow | Static Pressure | Noise | Weight | Curve |
|---|---|---|---|---|---|---|---|---|---|---|
| | ◐ 2BALL ○ Sleeve | (VDC) | (mA) | (WATTS) | (RPM) | (CFM) | (inch-$H_2O$) | (dB(A)) | (g) | |
| PMD1212PMB1-A (2).GN | ◐ | 12 | 1600 | 19.2 | 4200 | 190.0 | 0.65 | 54.0 | 330.0 | 1 |
| PMD1212PMB2-A (2).GN | ◐ | 12 | 1200 | 14.4 | 3800 | 170.0 | 0.54 | 51.0 | 330.0 | 2 |
| PMD2412PMB1-A (2).GN | ◐ | 24 | 760 | 18.2 | 4200 | 190.0 | 0.65 | 54.0 | 330.0 | 1 |
| PMD2412PMB2-A (2).GN | ◐ | 24 | 570 | 13.7 | 3800 | 170.0 | 0.54 | 51.0 | 330.0 | 2 |

### Air Flow-Static Pressure Characteristics

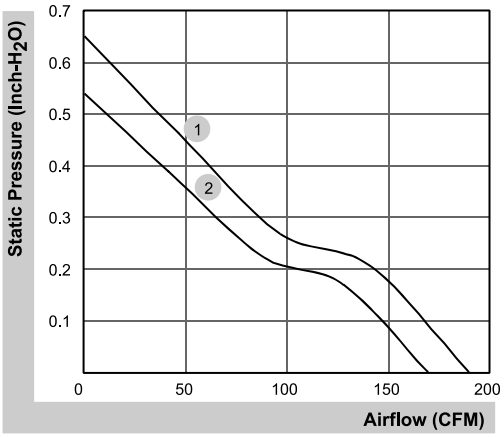


### External dimensions(mm)

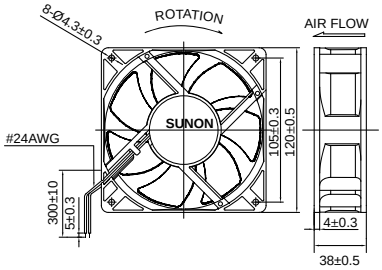


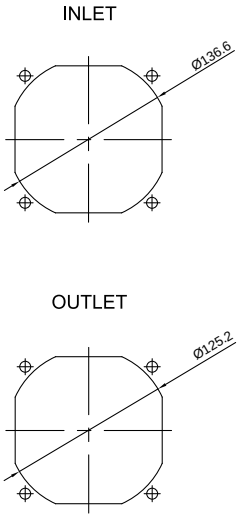


*All model could be customized. Please contact with Sunon Sales.
*Specifications are subject to change without notice. Please Visit SUNON website at www.sunon.com for update information.

# 120x120x38 mm

## 93.0~138.0 CFM

### Specifications

| MAGLev by SUNON | Bearing | Rating Voltage | Power Current | Power Consumption | Speed | Air Flow | Static Pressure | Noise | Weight | Curve |
|---|---|---|---|---|---|---|---|---|---|---|
| | ● VAPO | (VDC) | (mA) | (WATTS) | (RPM) | (CFM) | (inch-$H_2O$) | (dB(A)) | (g) | |
| MEC0381V1-0000-A99 | ● | 12 | 833 | 10.0 | 3100 | 138.0 | 0.36 | 48.0 | 218.0 | 1 |
| MEC0381V2-0000-A99 | ● | 12 | 421 | 5.1 | 2600 | 116.0 | 0.26 | 44.0 | 218.0 | 2 |
| MEC0381V3-0000-A99 | ● | 12 | 241 | 2.9 | 2100 | 93.0 | 0.18 | 37.0 | 218.0 | 3 |
| MEC0382V1-0000-A99 | ● | 24 | 383 | 9.2 | 3100 | 138.0 | 0.36 | 48.0 | 218.0 | 1 |
| MEC0382V2-0000-A99 | ● | 24 | 224 | 5.4 | 2600 | 116.0 | 0.26 | 44.0 | 218.0 | 2 |
| MEC0382V3-0000-A99 | ● | 24 | 130 | 3.1 | 2100 | 93.0 | 0.18 | 37.0 | 218.0 | 3 |

| Model | Bearing | Rating Voltage | Power Current | Power Consumption | Speed | Air Flow | Static Pressure | Noise | Weight | Curve |
|---|---|---|---|---|---|---|---|---|---|---|
| | ◐ 2BALL ○ Sleeve | (VDC) | (mA) | (WATTS) | (RPM) | (CFM) | (inch-$H_2O$) | (dB(A)) | (g) | |
| EEC0381B1-0000-A99 | ◐ | 12 | 833 | 10.0 | 3100 | 138.0 | 0.36 | 48.0 | 214.0 | 1 |
| EEC0381B2-0000-A99 | ◐ | 12 | 421 | 5.1 | 2600 | 116.0 | 0.26 | 44.0 | 214.0 | 2 |
| EEC0381B3-0000-A99 | ◐ | 12 | 241 | 2.9 | 2100 | 93.0 | 0.18 | 37.0 | 214.0 | 3 |
| EEC0382B1-0000-A99 | ◐ | 24 | 383 | 9.2 | 3100 | 138.0 | 0.36 | 48.0 | 214.0 | 1 |
| EEC0382B2-0000-A99 | ◐ | 24 | 224 | 5.4 | 2600 | 116.0 | 0.26 | 44.0 | 214.0 | 2 |
| EEC0382B3-0000-A99 | ◐ | 24 | 130 | 3.1 | 2100 | 93.0 | 0.18 | 37.0 | 214.0 | 3 |
| EEC0384B1-0000-A99 | ◐ | 48 | 203 | 9.7 | 3100 | 138.0 | 0.36 | 48.0 | 214.0 | 1 |
| EEC0384B2-0000-A99 | ◐ | 48 | 120 | 5.8 | 2600 | 116.0 | 0.26 | 44.0 | 214.0 | 2 |
| EEC0384B3-0000-A99 | ◐ | 48 | 69 | 3.3 | 2100 | 93.0 | 0.18 | 37.0 | 214.0 | 3 |

### Air Flow-Static Pressure Characteristics

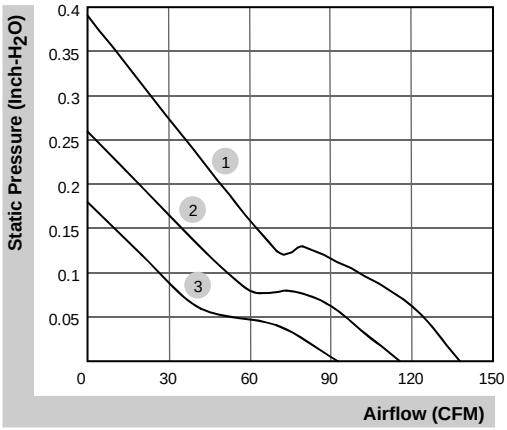


### External dimensions(mm)

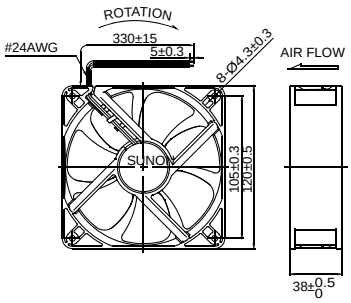


INLET

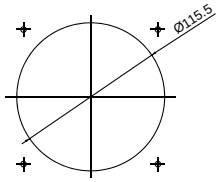


OUTLET

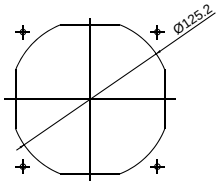


*All model could be customized. Please contact with Sunon Sales.
*Specifications are subject to change without notice. Please Visit SUNON website at www.sunon.com for update information.

## Blower Series New Model Numbering System

M F 50 15 1 V 1 – B 000 – A99

**Function Code**
999: standard model
A99: AutoRestart
C99: F type (3rd wire)
D99: with PWM
F99: AutoRestart and R type(3rd wire)
G99: AutoRestart and F type(3rd wire)
H99: AutoRestart and with PWM
Q99: AutoRestart , R type and with PWM
S99: AutoRestart , F type and with PWM

**Customer Code**

**Generation Code**
B : Blower

**Speed**
X: Super High 1: High 2: Medium 3: Low
4: Super Low

**Bearing**
V: Vapo B: 2 Ball S: Sleeve

**Voltage**
0: 5VDC 1: 12VDC 2: 24VDC 3: 36VDC
4: 48VDC

**Fan Thickness**
0~9
A~Z

**Frame Size**
0~9
A~Z

| Code | Size(mm) | Code | Size(mm) | Code | Size(mm) | Code | Size(mm) |
|---|---|---|---|---|---|---|---|
| 01~09 | 01~09 | A0~A9 | 100~109 | K0~K9 | 200~209 | V0~V9 | 300~309 |
| 10~19 | 10~19 | B0~B9 | 110~119 | L0~L9 | 210~219 | W0~W9 | 310~319 |
| 20~29 | 20~29 | C0~C9 | 120~129 | M0~M9 | 220~229 | X0~X9 | 320~329 |
| 30~39 | 30~39 | D0~D9 | 130~139 | N0~N9 | 230~239 | Y0~Y9 | 330~339 |
| 40~49 | 40~49 | E0~E9 | 140~149 | P0~P9 | 240~249 | Z0~Z9 | 340~349 |
| 50~59 | 50~59 | F0~F9 | 150~159 | Q0~Q9 | 250~259 | | |
| 60~69 | 60~69 | G0~G9 | 160~169 | R0~R9 | 260~269 | | |
| 70~79 | 70~79 | H0~H9 | 170~179 | S0~S9 | 270~279 | | |
| 80~89 | 80~89 | I0~I9 | 180~189 | T0~T9 | 280~289 | | |
| 90~99 | 90~99 | J0~J0 | 190~199 | U0~U9 | 290~299 | | |

**Motor Type**

**Series Code**
M Series E Series P Series

## Certification

## Safety

* Note: For critical or extreme environments, including non stop operation, please contact Sunon and we will gladly provide assistance with your product selection to ensure an appropriate cooling product for your application.
* Note: The "Life Expectancy" of the fan has not been evaluated for use in combination with any end application. Therefore, the Life Expectancy Test Reports(L10 and MTTF Report) that relate to the fan are only for reference.

## Blower Series Old Model Numbering System

GB 12 05 P K V 1 – 8

**Motor Poles**
- 8: 8 Poles
- 6: 6 Poles
- Blank: 4 Poles

**Speed**
- X: Super
- 1: High
- 2: Middle
- 3: Low
- 4: Extra Low

**Bearing System**
- V: Vapo
- B: Ball

**Frame Thickness**

| | | |
|---|---|---|
| E: 6mm | B: 24mm | I: 35mm |
| D: 8mm | T: 25mm | M: 38mm |
| F: 10mm | Q: 28mm | O: 40mm |
| G: 12mm | N: 30mm | P: 56mm |
| H: 15mm | L: 32mm | W: 60mm |
| K: 20mm | Y: 33mm | |

**Frame Material**
- P: PBT Plastic
- A: Aluminum

**Frame Size**

| | | | |
|---|---|---|---|
| 17:17mm | 38:38mm | 06:60mm | 97:97mm |
| 01:20mm | 04:40mm | 07:70mm | 12:120mm |
| 02:25mm | 45:45mm | 75:75mm | |
| 03:30mm | 05:50mm | 08:80mm | |
| 35:35mm | 55:55mm | 09:92mm | |

**Voltage**

| | |
|---|---|
| 05:5VDC | 12:12VDC |
| 24:24VDC | 48:48VDC |

**Blower Series**
- GB Series
- PMB Series

### P/N

Example: PMD1206PTVX P/N:U.GN

- (2) Two ball bearing
- GN RoHS compliance

## Certification

## Safety

* Note: For critical or extreme environments, including non stop operation, please contact Sunon and we will gladly provide assistance with your product selection to ensure an appropriate cooling product for your application.
* Note: The "Life Expectancy" of the fan has not been evaluated for use in combination with any end application. Therefore, the Life Expectancy Test Reports(L10 and MTTF Report) that relate to the fan are only for reference.

# 50x50x15 mm

## 2.6~5.4 CFM

### Specifications

| MAGLev by SUNON | Bearing | Rating Voltage | Power Current | Power Consumption | Speed | Air Flow | Static Pressure | Noise | Weight | Curve |
|---|---|---|---|---|---|---|---|---|---|---|
| | ● VAPO | (VDC) | (mA) | (WATTS) | (RPM) | (CFM) | (inch-$H_2O$) | (dB(A)) | (g) | |
| MF50151VX-B000-A99 | ● | 12 | 170 | 2.04 | 6000 | 5.4 | 0.97 | 42.2 | 30.0 | 1 |
| MF50151V1-B000-A99 | ● | 12 | 100 | 1.20 | 5000 | 4.5 | 0.67 | 39.8 | 30.0 | 2 |
| MF50151V2-B000-A99 | ● | 12 | 56 | 0.68 | 4000 | 3.5 | 0.40 | 33.1 | 30.0 | 3 |
| MF50151V3-B000-A99 | ● | 12 | 34 | 0.41 | 3000 | 2.6 | 0.18 | 23.4 | 30.0 | 4 |

### Air Flow-Static Pressure Characteristics

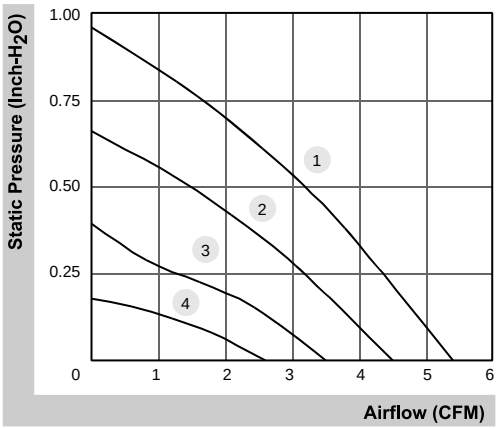


### External dimensions (mm)

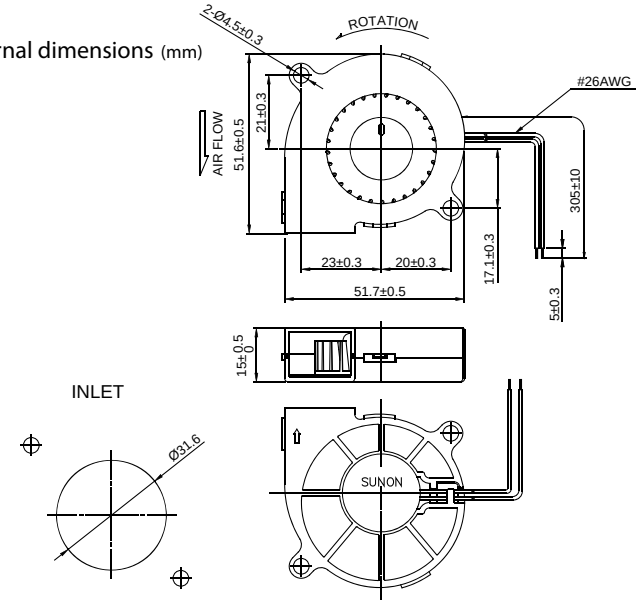


*All model could be customized. Please contact with Sunon Sales.
*Specifications are subject to change without notice. Please Visit SUNON website at www.sunon.com for update information.

# 50x50x15 mm

## 2.6~5.4 CFM

### Specifications

| Model | Bearing | Rating Voltage | Power Current | Power Consumption | Speed | Air Flow | Static Pressure | Noise | Weight | Curve |
|---|---|---|---|---|---|---|---|---|---|---|
| | ◐ 2BALL ○ Sleeve | (VDC) | (mA) | (WATTS) | (RPM) | (CFM) | (inch-$H_2O$) | (dB(A)) | (g) | |
| EF50151BX-1B000-A99 | ◐ | 12 | 150 | 1.80 | 6200 | 5.4 | 0.97 | 45.8 | 31.0 | 1 |
| EF50151B1-1B000-A99 | ◐ | 12 | 106 | 1.28 | 5200 | 4.5 | 0.67 | 41.0 | 31.0 | 2 |
| EF50151B2-1B000-A99 | ◐ | 12 | 54 | 0.65 | 4200 | 3.5 | 0.40 | 34.0 | 31.0 | 3 |
| EF50151B3-1B000-A99 | ◐ | 12 | 36 | 0.44 | 3200 | 2.6 | 0.18 | 26.0 | 31.0 | 4 |

### Air Flow-Static Pressure Characteristics

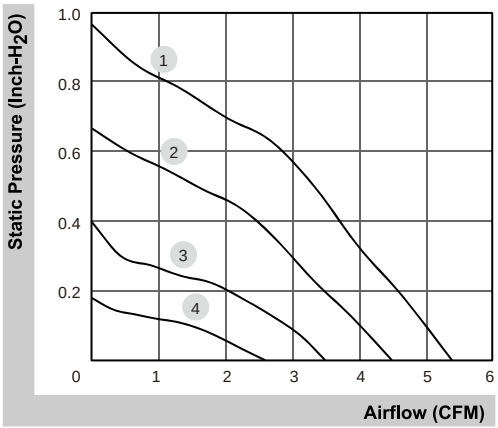


### External dimensions (mm)

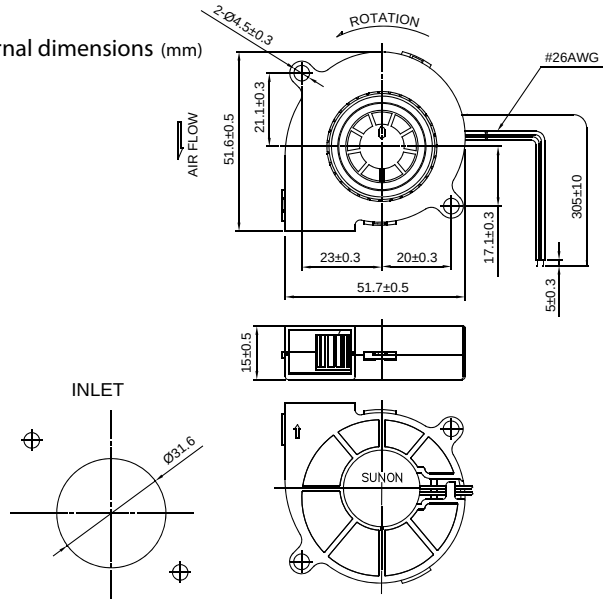


*All model could be customized. Please contact with Sunon Sales.
*Specifications are subject to change without notice. Please Visit SUNON website at www.sunon.com for update information.

# 50x50x20 mm

## 4.8~5.7 CFM

### Specifications

| MAGLev by SUNON | Bearing | Rating Voltage | Power Current | Power Consumption | Speed | Air Flow | Static Pressure | Noise | Weight | Curve |
|---|---|---|---|---|---|---|---|---|---|---|
| | ● VAPO | (VDC) | (mA) | (WATTS) | (RPM) | (CFM) | (inch-$H_2O$) | (dB(A)) | (g) | |
| GB1205PKV1-8AY GN | ● | 12 | 124 | 1.5 | 5200 | 5.7 | 0.66 | 35.0 | 33.0 | 1 |
| GB1205PKV2-8AY GN | ● | 12 | 104 | 1.3 | 4800 | 5.2 | 0.56 | 33.0 | 33.0 | 2 |
| GB1205PKV3-8AY GN | ● | 12 | 88 | 1.1 | 4400 | 4.8 | 0.46 | 30.0 | 33.0 | 3 |

### Air Flow-Static Pressure Characteristics

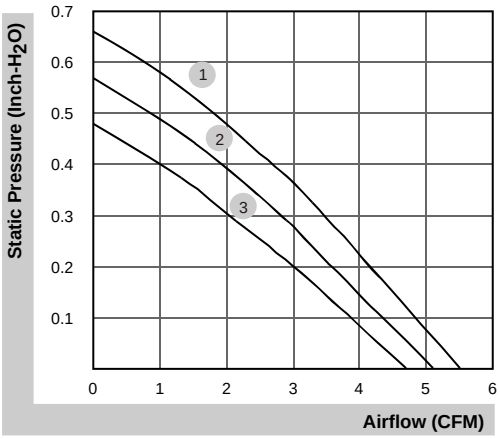


### External dimensions(mm)

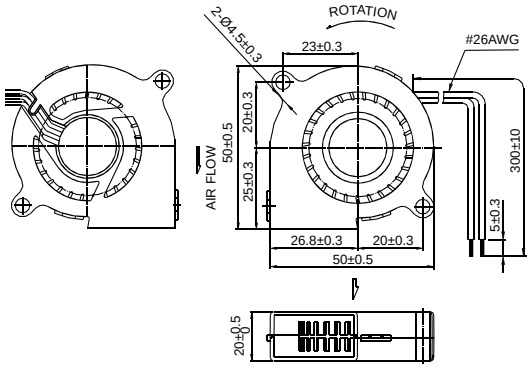


*All model could be customized. Please contact with Sunon Sales.
*Specifications are subject to change without notice. Please Visit SUNON website at www.sunon.com for update information.

# 60x60x15 mm

## 3.9~5.7 CFM

### Specifications

| MAGLev by SUNON | Bearing | Rating Voltage | Power Current | Power Consumption | Speed | Air Flow | Static Pressure | Noise | Weight | Curve |
|---|---|---|---|---|---|---|---|---|---|---|
| | ● VAPO | (VDC) | (mA) | (WATTS) | (RPM) | (CFM) | (inch-$H_2O$) | (dB(A)) | (g) | |
| MF60151V1-B000-A99 | ● | 12 | 90 | 1.08 | 5000 | 5.7 | 0.44 | 40.2 | 36.0 | 1 |
| MF60151V2-B000-A99 | ● | 12 | 67 | 0.81 | 4400 | 5.1 | 0.33 | 36.0 | 36.0 | 2 |
| MF60151V3-B000-A99 | ● | 12 | 40 | 0.48 | 3400 | 3.9 | 0.19 | 28.8 | 36.0 | 3 |

### Air Flow-Static Pressure Characteristics

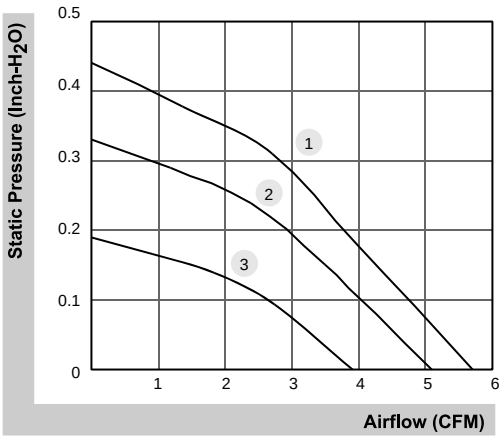


### External dimensions (mm)

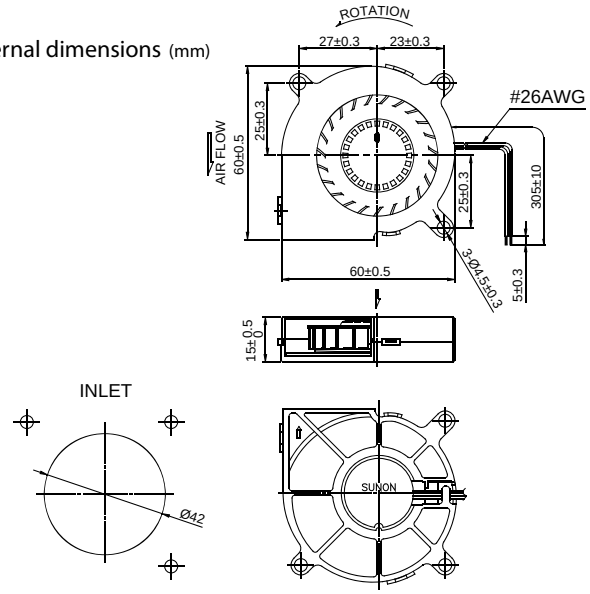


*All model could be customized. Please contact with Sunon Sales.
*Specifications are subject to change without notice. Please Visit SUNON website at www.sunon.com for update information.

# 75x75x30 mm

## 10.8~15.5 CFM

### Specifications

| Model | Bearing | Rating Voltage | Power Current | Power Consumption | Speed | Air Flow | Static Pressure | Noise | Weight | Curve |
|---|---|---|---|---|---|---|---|---|---|---|
| | ◐ 2BALL ○ Sleeve | (VDC) | (mA) | (WATTS) | (RPM) | (CFM) | (inch-$H_2O$) | (dB(A)) | (g) | |
| PF75301B1-1B000-A99 | ◐ | 12 | 200 | 2.40 | 3400 | 15.5 | 0.57 | 42.0 | 85.0 | 1 |
| PF75301B2-1B000-A99 | ◐ | 12 | 142 | 1.71 | 3000 | 13.8 | 0.43 | 38.6 | 85.0 | 2 |
| PF75301B3-1B000-A99 | ◐ | 12 | 82 | 0.99 | 2400 | 10.8 | 0.24 | 32.9 | 85.0 | 3 |
| PF75302B1-1B000-A99 | ◐ | 24 | 115 | 2.76 | 3400 | 15.5 | 0.57 | 42.0 | 88.0 | 1 |
| PF75302B2-1B000-A99 | ◐ | 24 | 80 | 1.92 | 3000 | 13.8 | 0.43 | 38.6 | 88.0 | 2 |
| PF75302B3-1B000-A99 | ◐ | 24 | 47 | 1.13 | 2400 | 10.8 | 0.24 | 32.9 | 88.0 | 3 |

### Air Flow-Static Pressure Characteristics

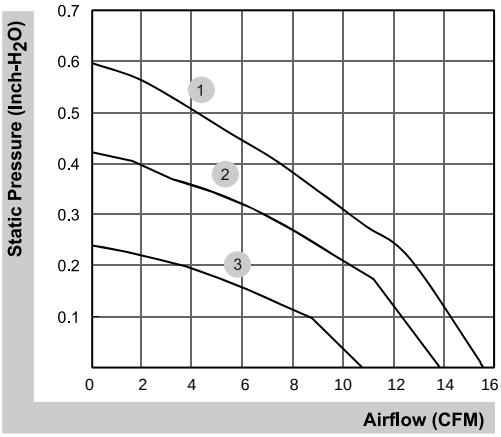


### External dimensions(mm)

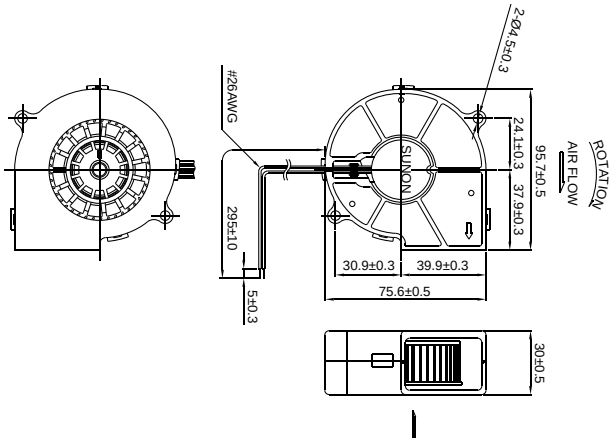


*All model could be customized. Please contact with Sunon Sales.
*Specifications are subject to change without notice. Please Visit SUNON website at www.sunon.com for update information.

# 97x94x33 mm

## 22.4~30.5 CFM

### Specifications

| Model | Bearing | Rating Voltage | Power Current | Power Consumption | Speed | Air Flow | Static Pressure | Noise | Weight | Curve |
|---|---|---|---|---|---|---|---|---|---|---|
| | ◐ 2BALL ○ Sleeve | (VDC) | (mA) | (WATTS) | (RPM) | (CFM) | (inch-$H_2O$) | (dB(A)) | (g) | |
| PMB1297PYB1-AY (2).GN | ◐ | 12 | 600 | 7.20 | 3600 | 30.5 | 0.92 | 55.8 | 185.00 | 1 |
| PMB1297PYB2-AY (2).GN | ◐ | 12 | 440 | 5.28 | 3200 | 26.6 | 0.65 | 53.1 | 185.00 | 2 |
| PMB1297PYB3-AY (2).GN | ◐ | 12 | 300 | 3.60 | 2700 | 22.4 | 0.43 | 50.0 | 185.00 | 3 |

### Air Flow-Static Pressure Characteristics

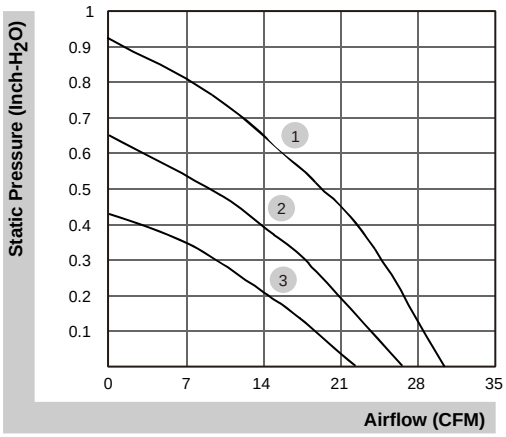


### External dimensions(mm)

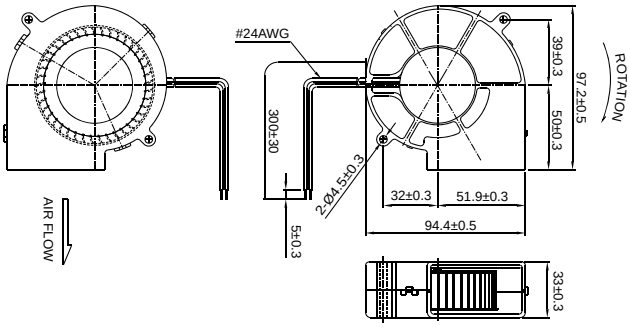


*All model could be customized. Please contact with Sunon Sales.
*Specifications are subject to change without notice. Please Visit SUNON website at www.sunon.com for update information.

SUNON®

**Headquarters**
**Sunonwealth Electric Machine Industry Co., Ltd.**
TEL：+886-7-8135888
E-mail：sunon@sunon.com.tw

**Sunon Inc. (U.S.A.)**
TEL：+1-714-255-0208
E-mail：info@sunon.com

**Sunon SAS (Europe)**
TEL：+33-1-46154515
E-mail：info@sunoneurope.com

**Sunon Taipei Office (Taiwan)**
TEL：+886-2-27992383

**Sunon Shen Zhen Office (China)**
TEL：+86-755-26880688
E-mail：sunon@sunon.com.tw

**Sunon Beijing Office (China)**
TEL：+86-10-62669511
E-mail：sunon@sunon.com.tw

**Sunon Wuhan Office (China)**
TEL：+86-27-81388268
E-mail：sunon@sunon.com.tw

2018/12/31 (240-A)

© 2018 SUNONWEALTH Electric Machine Industry Co., Ltd.